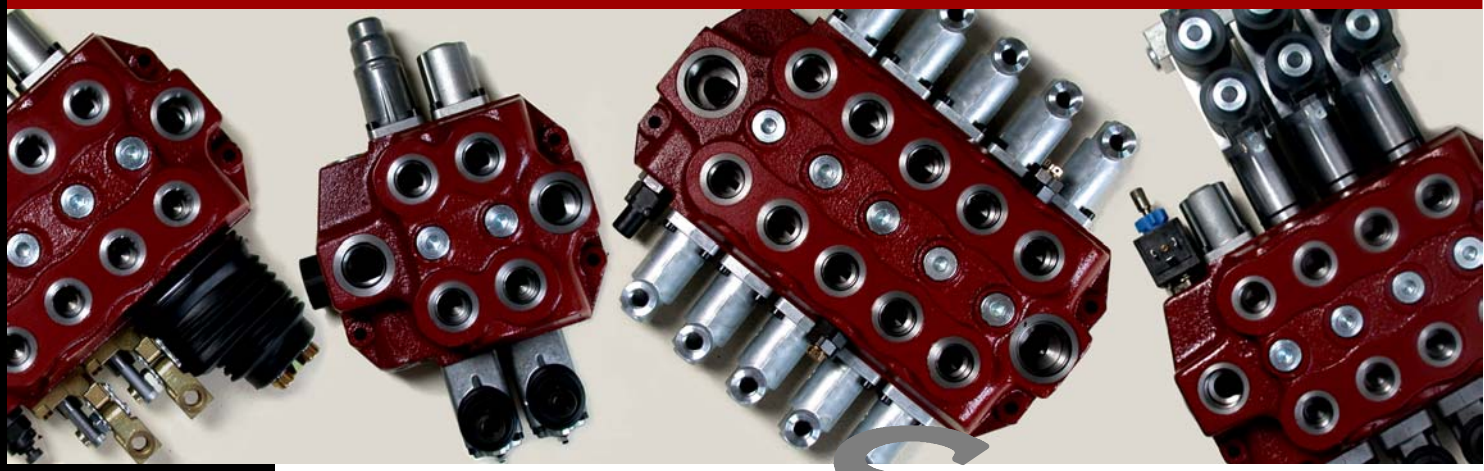

MONOBLOCK
DIRECTIONAL CONTROL VALVE

SLM140

DLM140

ISO 9001

walvoil
HYDRAULIC CONTROL SYSTEMS

SDM140

Simple, compact and heavy duty designed monoblock valves from 1 to 6 sections for open and closed centre hydraulic systems.

- Fitted with a direct or pilot operated main pressure relief valve.
- Each spool has indipendent load check valve.
- Parallel circuit.
- Optional carry-over port.
- Diameter 18 mm - *0.71 in* interchangeable spools.
- A wide variety of service port valves.
- Available manual, pneumatic, electro-pneumatic, hydraulic, electro-hydraulic and remote with flexible cables spool control kits.

DLM140

1 to 6 sections monoblock valves for Load-Sensing variable displacement pump circuit.

- 3 ways 2 positions valve on L.S. line to prevent dropping load during rise action.
- Ports valves and control kits are the same of SDM140 directional valve.

Additional information

This catalogue shows the product in the most standard configurations.
Please contact Sales Dpt. for more detailed information or special request.

WARNING!

All specifications of this catalogue refer to the standard product at this date. Walvoil, oriented to a continuous improvement, reserves the right to discontinue, modify or revise the specifications, without notice.

WALVOIL IS NOT RESPONSIBLE FOR ANY DAMAGE CAUSED BY AN INCORRECT USE OF THE PRODUCT.

1st edition September 2005:

Contents

Working condition

This catalogue shows technical specifications and diagrams measured with mineral oil of 46 mm^2/s - *46 cSt* viscosity at 40°C temperature.

SDM140			
Nominal flow rating		80 l/min	
Operating pressure (maximum)		315 bar	*4600 psi*
Max. back pressure	*on outlet port **T***	25 bar	*360 psi*

DLM140			
Nominal flow rating		110 l/min	
Operating pressure (maximum)		250 bar	*3600 psi*
Max. back pressure	*on outlet port **T***	25 bar	*360 psi*

Internal leakage A(B)→T	*Δp=100 bar - 1450 psi, fluid and valve at 40 °C*	3 cm^3/min	*0.18 in^3/min*
Hydraulic fluid		Mineral base oil	
Fluid temperature	*with NBR seals*	from -20° to 80°C	
	with FPM (VITON) seals	from -20° to 100°C	
Viscosity	*operating range*	from 15 to 75 mm^2/s	*from 15 to 75 cSt*
	min	12 mm^2/s	*12 cSt*
	max	400 mm^2/s	*400 cSt*
Max level of contamination		-/19/16 - ISO 4406	
Ambient temperature	*mechanical, hydraulic, pneumatic controls*	from -40° to 60°C	
	electric controls	from -20° to 60°C	

NOTE - *For different conditions please contact Sales Dept.*

Standard threads

REFERENCE STANDARDS

		BSP	UN-UNF	METRICA	NPTF
THREAD ACCORDING TO		ISO 228/1	ISO 263	ISO 262	ANSI B1.20.3
		BS 2779	ANSI B1.1 unified		
CAVITY ACCORDING TO	ISO	1179	11926	6149	
	SAE		J1926	J2244	J476a
	DIN	3852-2 shape X o Y			

PORTS THREAD

MAIN PORTS	BSP	UN-UNF	METRIC
IInlet **P** and carry-over **C**	G 3/4	1 1/16-12 (SAE 12)	M27x2
Ports **A** and **B**	G 1/2	7/8-14 (SAE 10)	M22x1,5
Outlet **T**	G 3/4	1 1/16-12 (SAE 12)	M27x2
Load sensing **LS**	G 1/4	9/16-18 (SAE 6)	M14x1,5
CONTROL PILOT PORTS			
Pneumatics	NPTF 1/8-27	NPTF 1/8-27	NPTF 1/8-27
Hydraulics	G 1/4	9/16-18 (SAE 6)	G 1/4

Performance data (pressure drop vs. flow)

Open centre

From top inlet to top outlet (execution **PSA**).

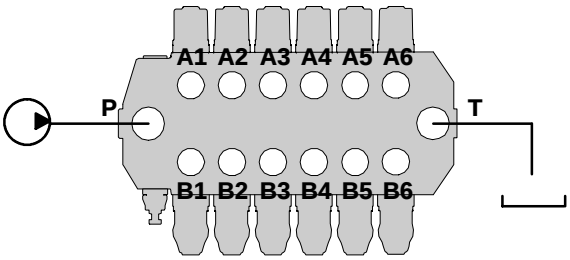

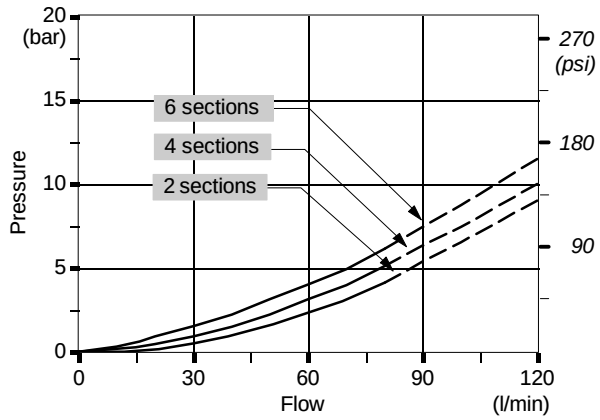

Inlet to work port

From top inlet to **A** port (spool in position **1**) or **B** port (spool in position **2**).

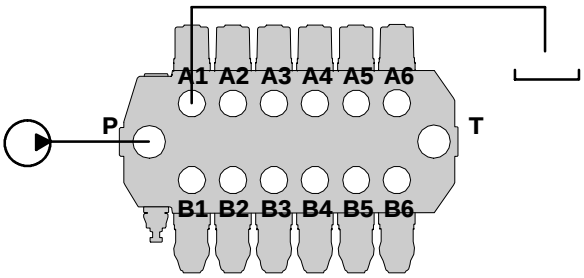

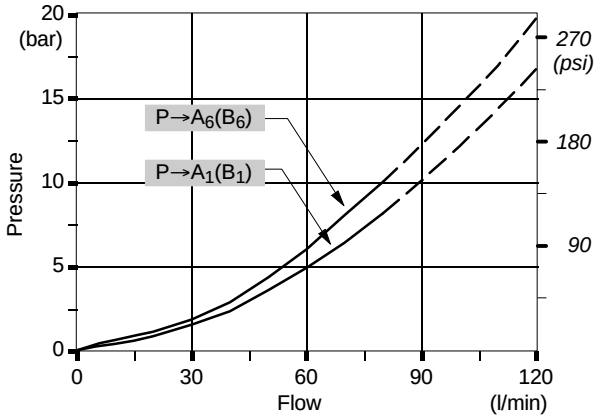

Work port to outlet

From **A** port (spool in position **2**) or **B** port (spool in position **1**) to top outlet.

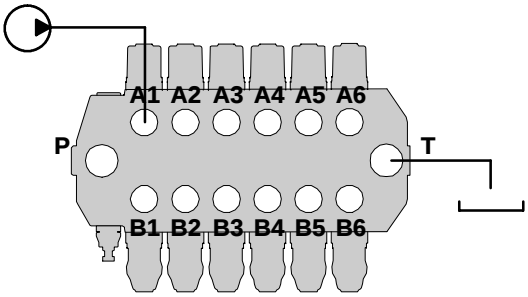

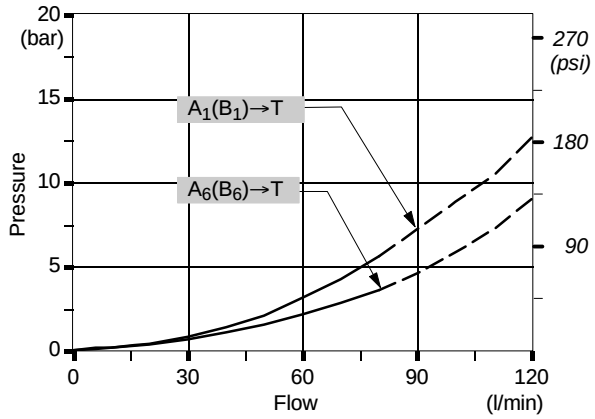

NOTE - *Measured with spool type 1.*

Contents

SDM140 directional control valve

Dimensional data

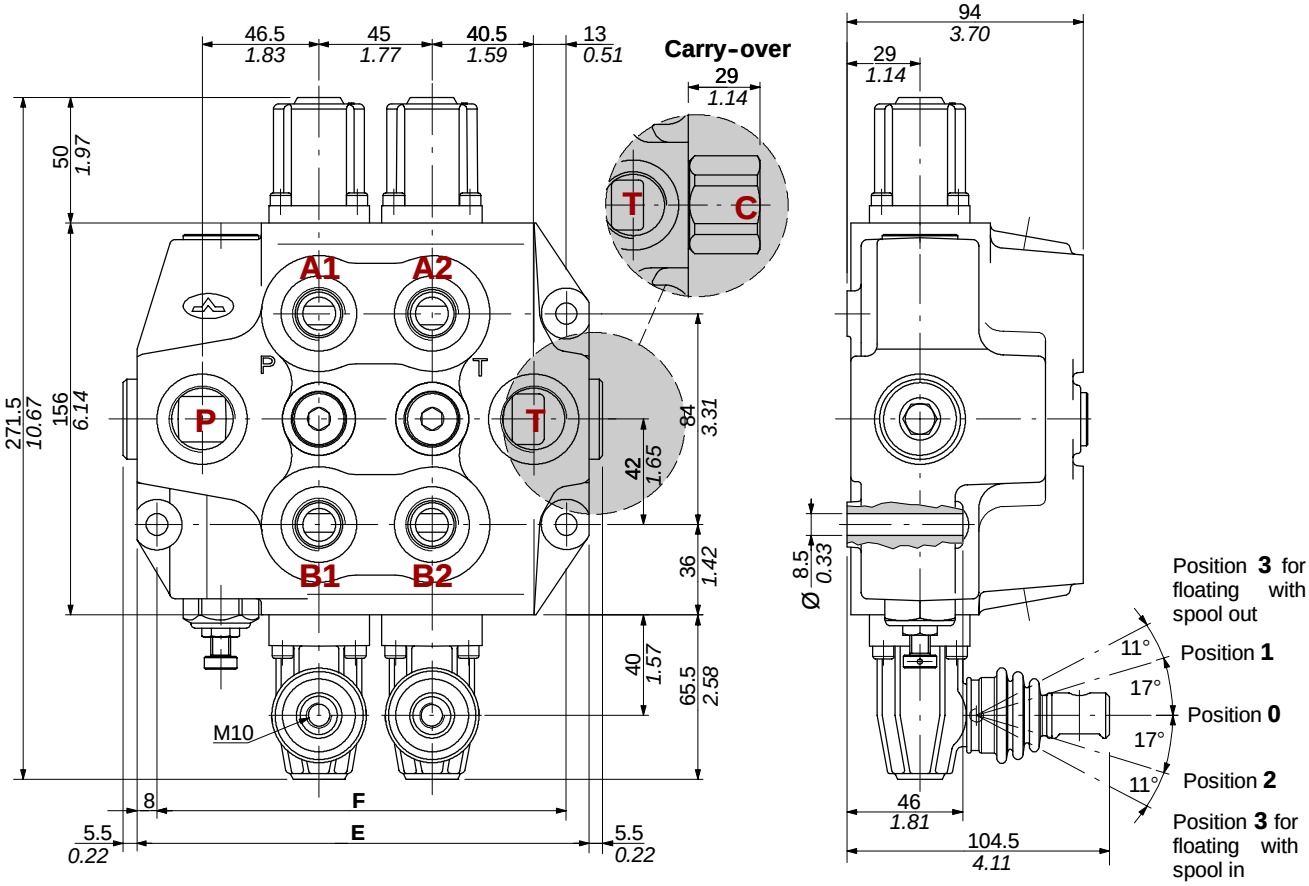

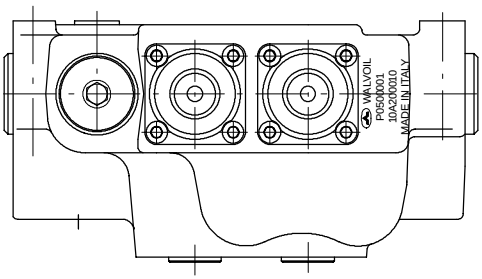

WALVOIL
P0500001
10A200010
MADE IN ITALY

Production batch :
P05 = production year (2005)
00001 = progressive number

Valve code

TYPE	E		F		Weight	
	mm	*in*	mm	*in*	kg	*lb*
SDM140/1-P	135	*5.32*	118	*4.65*	9.3	*20.5*
SDM140/2-P	180	*7.09*	163	*6.42*	13.4	*29.5*
SDM140/3-P	225	*8.86*	208	*8.19*	16.6	*36.6*

TYPE	E		F		Weight	
	mm	*in*	mm	*in*	kg	*lb*
SDM140/4-P	270	*10.63*	253	*9.96*	20.8	*45.9*
SDM140/5-P	315	*12.40*	298	*11.73*	24	*52.9*
SDM140/6-P	360	*14.17*	343	*13.50*	27.3	*60.2*

Hydraulic circuit

Standard configuration with top inlet and outlet ports (**PSA** execution).

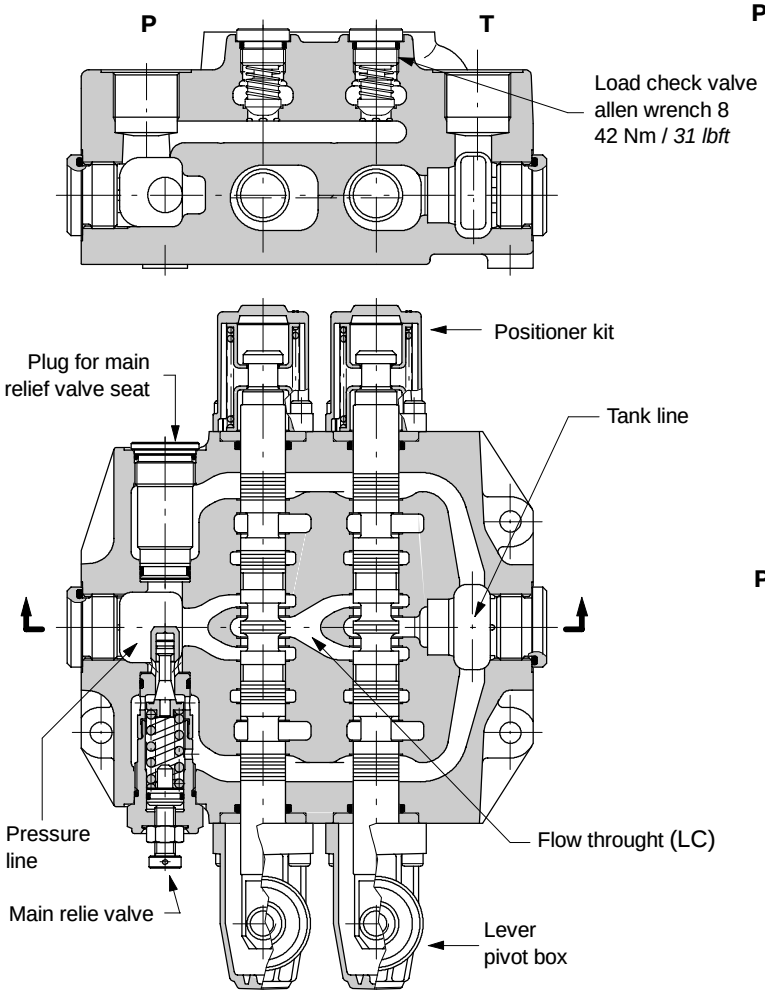

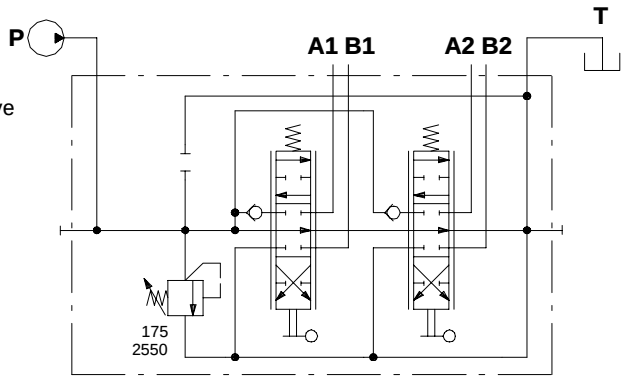

Description example:
SDM140/2-P(YG3-175)/18L/18L/**PSA**

On request the main relief valve can be assembled on the spool control kit side (VMC execution)

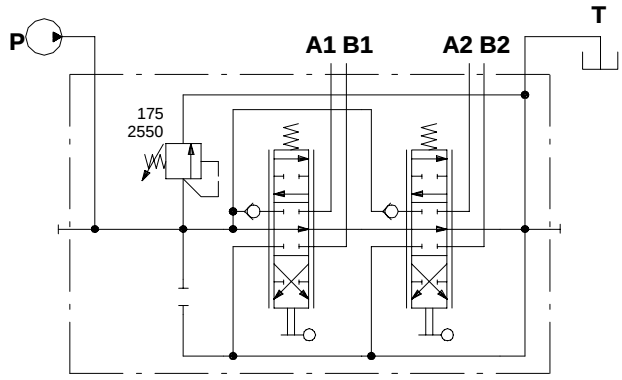

Description example:
SDM140/2-P(YG3-175)/18L/18L/**PSA-VMC**

Right inlet

Simmetrical body allows the reverse assembly of spools and relative kits (execution **ED**).

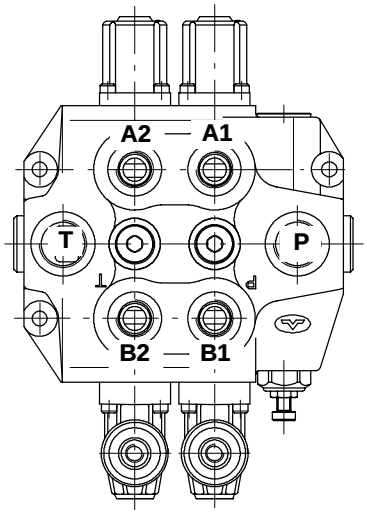

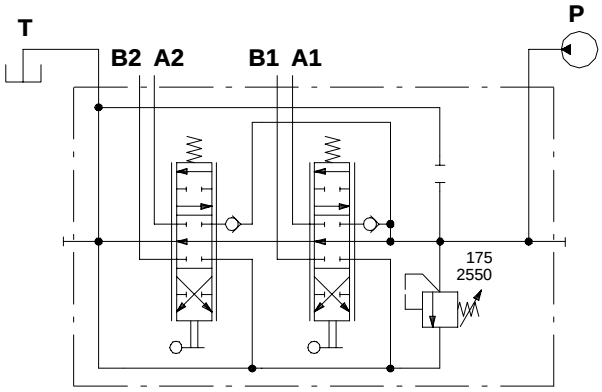

Description example:
SDM140/2-P(YG3-175)/**ED**-18L/**ED**-18L/PSA

Ordering code

Description example:

1ª sezione — following section

SDM140/ 2 - P (YG3-175) L / 1 8IM / 1 8 L . P2(G3-100) / AE *

1. 2. 3. 7. 4. 5. 6. 8. 9.

Main relief valve setting (bar) — Port valve setting (bar)

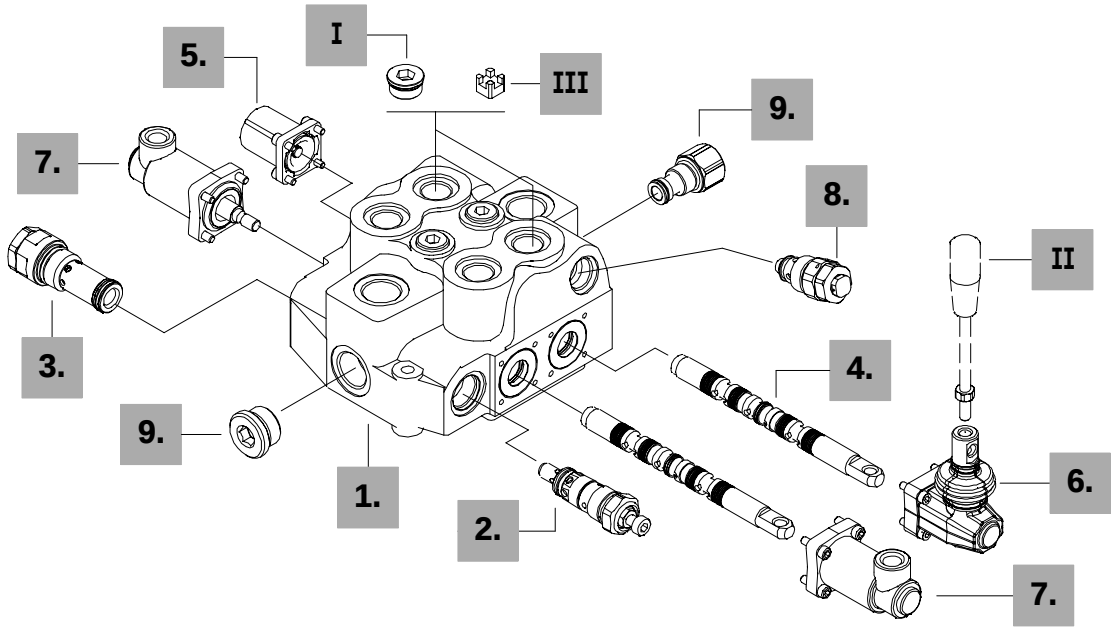

1. Body kit *

TYPE	CODE	DESCRIPTION
Without service port valves prearrangement		
SDM140/1-P	5KC1973000	1 section
SDM140/2-P	5KC1963000	2 sections
SDM140/3-P	5KC1923008	3 sections
SDM140/4-P	5KC1933004	4 sections
SDM140/5-P	5KC1943004	5 sections
SDM140/6-P	5KC1953000	6 sections

Include body, seals, rings and load check valves.

2. Inlet reliaf options *page 12*

Standard setting is referred to 10 l/min flow.

TYPE	CODE	DESCRIPTION
SV	XTAP530590	Relief valve blanking plug
VMD140/1: direct pressure relief valve type Y (standard)		
(YG2-125)	X134121125	Range 63 to 125 bar / *900 to 1800 psi* standard setting 125 bar / *1800 psi*
(YG3-175)	X134121175	Range 100 to 200 bar / *1450 to 2900 psi* standard setting 175 bar / *2550 psi*
(YG4-250)	X134121250	Range 160 to 315 bar / *2300 to 4600 psi* standard setting 250 bar / *3600 psi*
VMP140/1: ad azionamento pilotato tipo X		
(XG-175)	X134211175	Range 25 to 280 bar / *360 to 4050 psi* standard setting 175 bar / *2550 psi*

3. Inlet valve options *page 14*

TYPE	CODE	DESCRIPTION
L	X134510000	Hydraulic pilot unloader valve (FC0.75)
ELN	5CAR408332	12 VDC solenoid pilot unloader valve
	5CAR408334	24 VDC olenoid pilot unloader valve
ELT	5CAR408322	As type ELN 12VDC with emergengy push-button type "push and twist"
	5CAR408324	As previous: 24VDC
SV	XTAP530590	Relief valve blanking plug: *in directional valve description "**SV**" type must be omitted because standard*

4. Spool options *page 16*

TYPE	CODE	DESCRIPTION
1	3CU1310401	Double acting, 3 pos., with A and B closed in neutral position
2	3CU1325401	Double acting, 3 pos., with A and B open to tank in neutral position
2H	3CU1325200	Double acting, 3 pos., with A and B partially open to tank
3	3CU1331130	Single acting on A, 3 pos., B plugged: requires G1/2 plug (see part I)
4	3CU1335130	Single acting on B, 3 pos., A plugged: requires G1/2 plug (see part I)

. . . . . follow

NOTE (*****) - *Items are referred to **BSP** thread.*

4. Spools *page 16*

Special spools for particular positioner kits *page18*

TYPE	CODE	DESCRIPTION
8P	3CU1361400	Double acting, 3 position, with regenerative in position 2
5	3CU1340420	Double acting, 4 positions, floating circuit in 4th position with spool in
5BCS	3CU1340440	Double acting, 4 positions, floating circuit in 4th position with spool out

5. "A" side spool positioners *page 21*

TYPE	CODE	DESCRIPTION
8	5V08108010	With spring return in neutral position
8D	5V08108202	As type 8 and pin with M8 female thread for dual control
8D1	5V08108210	As type 8 and pin with ∅ 8mm (*0.32in*) radial hole
9B	5V09108040	With detent in position 1 and spring return in neutral position
10B	5V10108040	With detent in position 2 and spring return in neutral position
11B	5V11108040	With detent in position 1 and 2, spring return in neutral position
8K	5V08708112	With spring return in neutral position and 12 VDC spool solenoid lock device
	5V08708124	As previous 24 VDC
8MG3(NO)	5V08108150	With spring return in neutral position and microswitch in positions 1 and 2
8ED3	5V08108360	ON/OFF 12 VDC elettro-hydraulic kit
	5V08108361	ON/OFF 24 VDC elettro-hydraulic kit
8PG	5V08108708	Proportional pneumatic control
8EPG3	5V08108737	ON/OFF 12 VDC electro-pneumatic kit
	5V08108742	ON/OFF 24 VDC electro-pneumatic kit

Particular positioner kits for special spools *page30*

13	5V13108040	4 pos. with spring return in neutral pos. and detent in 4th pos.**: for spool 5**
13C	5V13208040	4 pos. with spring return in neutral pos. and detent in 4th pos.**: for spool 5BCS**
13MG3F(NO)	5V13108051	As type 13 with microswitch in positions 1 and 2**: for spool 5**
13CMG3F(NO)	5V13208050	As type 13C with microswitch in positions 1 and 2**: for spool 5BCS**
13K	5V13708113	As type 13 with 12 VDC spool solenoid lock device: **for spool 5**
	5V13708124	As previous 24 VDC

6. "B" side options *page 33*

TYPE	CODE	DESCRIPTION
L	5LEV108000	Standard lever box
LB	5LEV308000	Steel lever box
SLP	5COP108000	Witout lever box, with dust-proof plate
SLCY	5COP208060	Witout lever box, with endcap
TQ	5TEL108110	Flexible cable connection
LCB	5CLO308100	Joystick lever for 2 sections operation

III Restrictor

TYPE	CODE	DESCRIPTION
R3,6	3SPE217060	Restrictor ∅3.6 mm / *0.142 in* for G 1/2 port

7. Complete controls * *page 37*

TIPO	CODICE	DESCRIZIONE
8EZ3		Proportional electrohydraulic control: for options and codes see page 40.
8IM	5IDR208300	Proportional hydraulic control

Particular controls for special spools *page39*

13IM	5IDR208214	Proportional hydraulic control: **for spool 5**

8. Port valves *page 42*

Need special body kit

Standard setting is referred to 10 l/min flow.

TYPE	CODE	DESCRIPTION
PT	3XTAP524290	Valve blanking plug
DST	3XTAP624180	Valve blanking plug with connection to tank
Anti-shock valve		
P(G3-100)	3XCAR208113	From 100 to 250 bar / *1450 to 3600 psi*: standard setting 100 bar / *1450 psi*
P(G4-200)	3XCAR208114	From 200 to 315 bar / *2900 to 4600 psi*: Standard setting 200 bar / *2900 psi*
Anti-shock/anti-cavitation valve		
U(G2-63)	XCAR308112	From 63 to 125 bar / *900 to 1800 psi*: Standard setting 63 bar / 900 psi
U(G3-100)	XCAR308115	From 100 to 250 bar / *1450 to 3600 psi*: Standard setting 100 bar / *1450 psi*
U(G4-200)	XCAR308114	From 200 to 315 bar / *2900 to 4600 psi*: Standard setting 200 bar / *2900 psi*
Pilot operated anti-shock/anti-cavitation valve: **fixed setting**		
UX(Z-63)	X005410063	Setting 63 bar / 900 psi
UX(Z-80)	X005410080	Setting 80 bar / 1150 psi
UX(Z-100)	X005410100	Setting 100 bar / 1450 psi
UX(Z-125)	X005410125	Setting 125 bar / 1800 psi
UX(Z-160)	X005410160	Setting 160 bar / 2320 psi
UX(Z-200)	X005410200	Setting 200 bar / 2900 psi
UX(Z-250)	X005410250	Setting 250 bar / 3600 psi
UX(Z-315)	X005410315	Setting 315 bar / 4600 psi
Pilot operated anti-shock/anti-cavitation valve: **adjustable setting**		
UX(G-145)	X005411200	From 100 to 280 bar / *1450 to 4050 psi*: Standard setting
Anti-cavitation valve		
C	XCAR408110	Anti-cavitation valve

9. Inlet and outlet options* *page 46*

TYPE	CODE	DESCRIPTION
PSA	3XTAP732200	G3/4 plug; nr.2 for upper inlet and outlet.
PSL	3XTAP732200	G3/4 plug; nr.2 for side inlet and outlet
AE	XGIU536695	G3/4 carry-over sleeve (need nr.1 G3/4 plug)
AEK	XTAP532465	Plug for closed centre (need nr.1 G3/4 plug)

I Ports plug *

TYPE	CODE	DESCRIPTION
G1/2	3XTAP727180	For single acting (spools type 3 and 4)

II Optional handlevers

TYPE	CODE	DESCRIPTION
AL01/M10x200	170012020	For L lever box L= 200 mm / *7.87 in*
AL08/M12x200	170013120	For LB lever or LCB joystick L= 200 mm / 7.87 *in*

Inlet relief options

Direct pressure relief valve

VMD140 (Y G 3 - 175)

- 175 — Pressure setting in bar (standard 175 / *2540 psi*)
- 3 — Adjustable spring type **(2, 3, 4)**.
- G — Adjustment type **(G, Z)**.

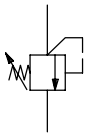

Adjustment type

G: *with screw*

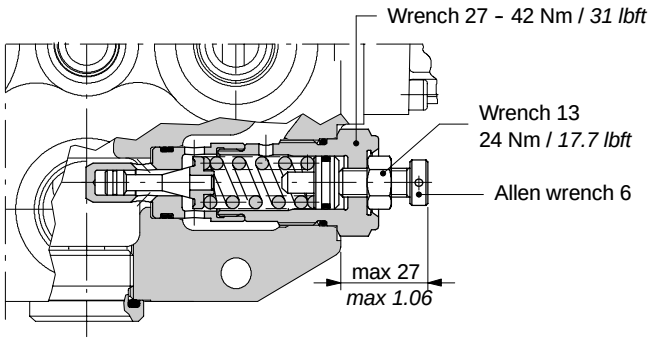

Z: *with nylon tamper proof cap*

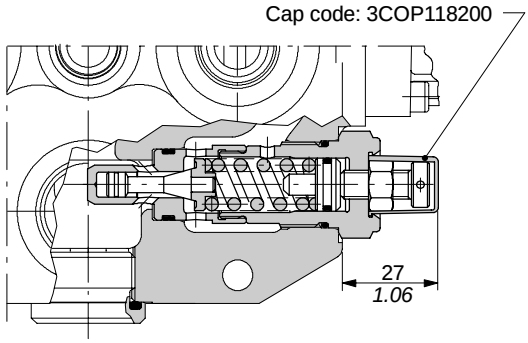

Performance data

Spring nr. 2 (green band)

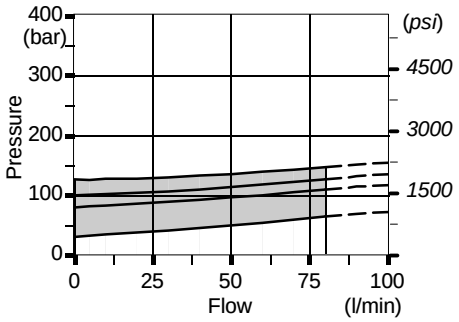

Spring nr. 3 (blue band)

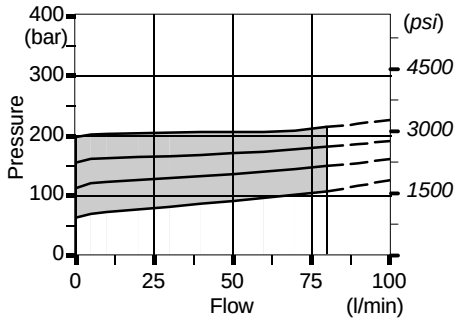

Spring nr. 4 (red band)

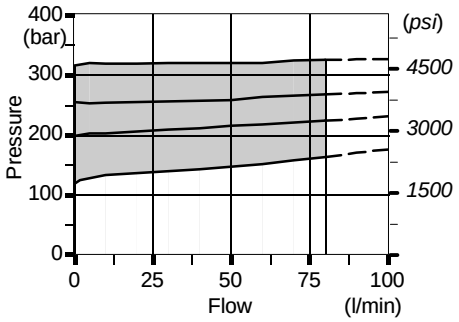

Time response

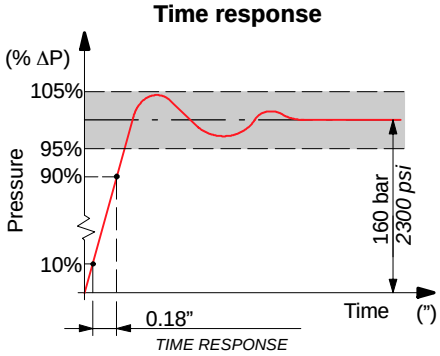

Inlet relief options

Pilot operated pressure relief valve

VMP140 (X G - 175)

- 175 — Pressure setting in bar (standard 175 / *2540 psi*)
- X — Adjustable type **(G, Z)**.

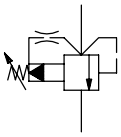

Adjustment type

G: *with screw*

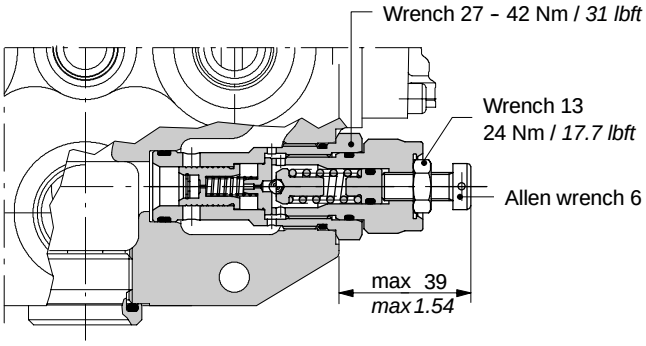

Z: *with nylon tamper proof cap*

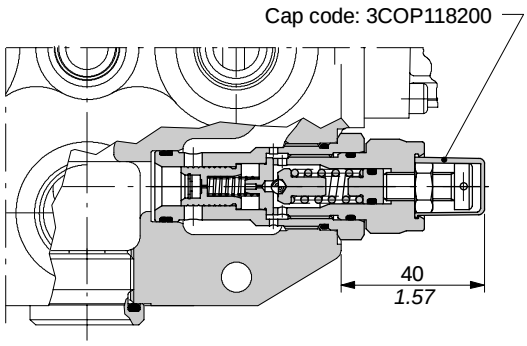

Performance data

Range setting

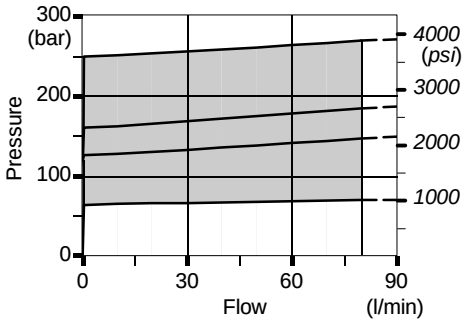

Time response

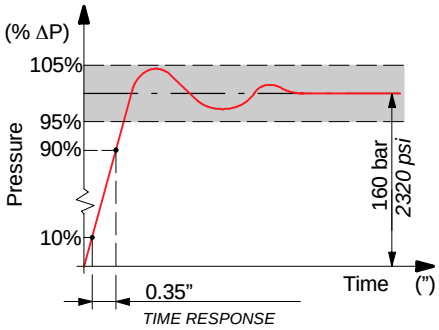

SV: relief valve blanking plug

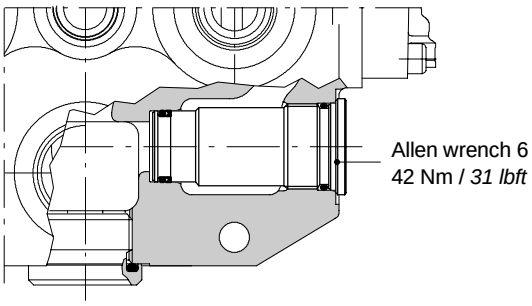

Inlet valve options

Hydraulic pilot unloader valve type L

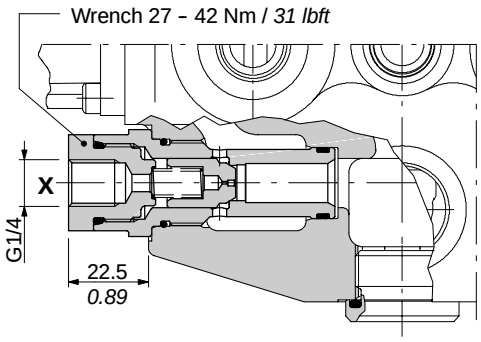

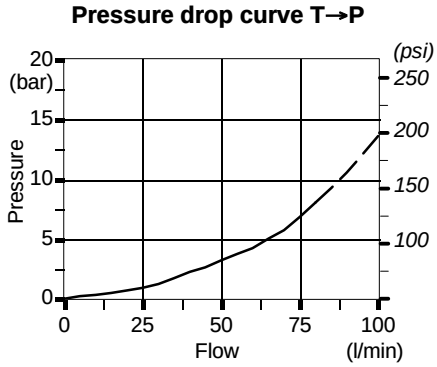

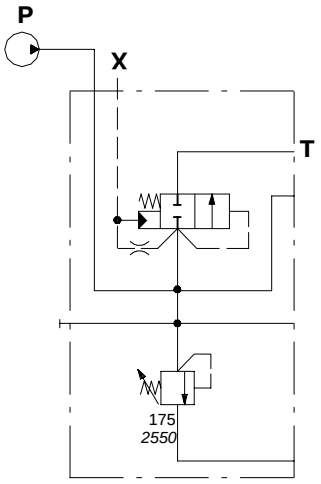

Operating features

Internal leakage . . . . . : 10 cm^3/min at 100 bar
0.61 in^3/min at 1450 psi

Description example:
SDM140/2-P(YG3-175)**L**/..../PSA

Solenoid pilot unloader valves

Type ELN:

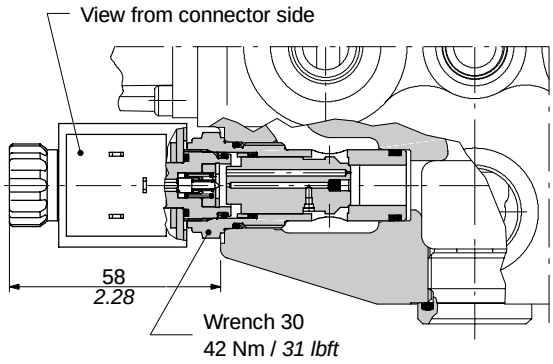

Type ELT: Emergency with push button and spring return; for detent position turn the button after press it.
WARNING: the manual override option is intended for emergency use, not for continuous duty operation.

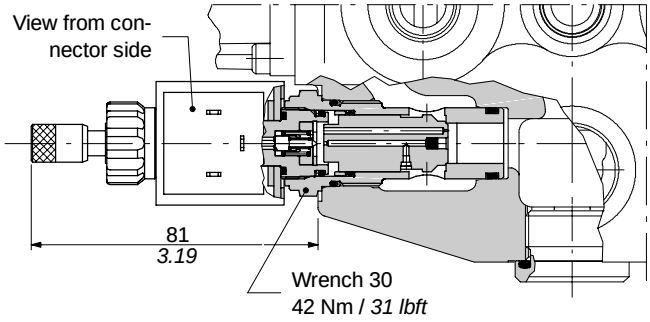

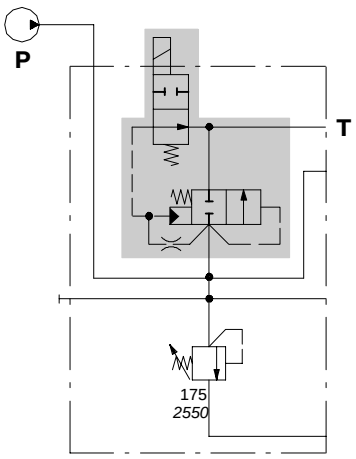

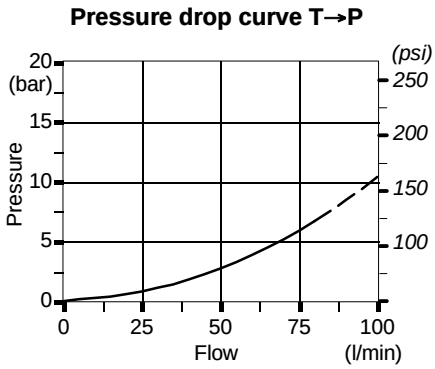

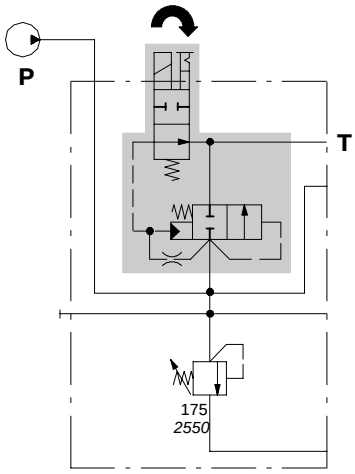

Description example:
SDM140/2-P(YG3-175)**ELT**/..../PSA-**12VDC**

Description example:
SDM140/2-P(YG3-175)**ELT**/..../PSA-**12VDC**

Solenoid pilot unloader valves

COIL CODES

Voltage	CONNECTION TYPE			
	ISO4400	AMP JPT		Deutsch DT
		without diode	with diode	
12 VDC	2X4311012	2X4311015	2X4311212	2X4311412
24 VDC	2X4311024	2X4311025	2X4311224	2X4311424

Coil with ISO4400 connector

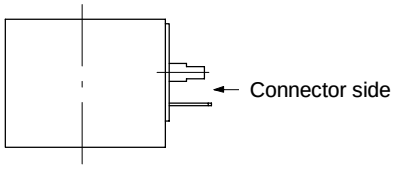

Nominal voltage tolerance . . . . . : ±10%
Power rating . . . . . : 17 W
Nominal current . . . . . : 1.58 A - 12 VDC
: 0.81 A - 24VDC
Coil insulation . . . . . : Class F
Weather protection . . . . . : IP65
Duty cycle . . . . . : 100%

Coil with AMP JPT connector

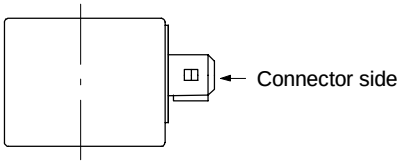

Nominal voltage tolerance . . . . . : ±10%
Power rating . . . . . : 17 W
Nominal current . . . . . : 1.3 A - 12 VDC
: 0.74 A - 24VDC
Coil insulation . . . . . : Class F
Weather protection . . . . . : IP65
Duty cycle . . . . . : 100%
NOTE: circuit with and without bidirectional diode

Coil with Deutsch DT connector

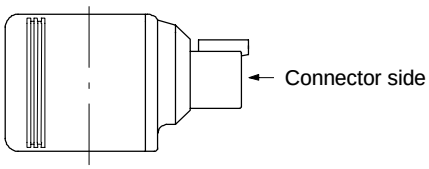

Nominal voltage tolerance . . . . . : ±10%
Power rating . . . . . : 22 W
Nominal current . . . . . : 1.76 A - 12 VDC
: 0.9 A - 24VDC
Coil insulation . . . . . : Class H
Weather protection . . . . . : IP67
Duty cycle . . . . . : 100%
NOTE: circuit with bidirectional diode

Spools

Type 1

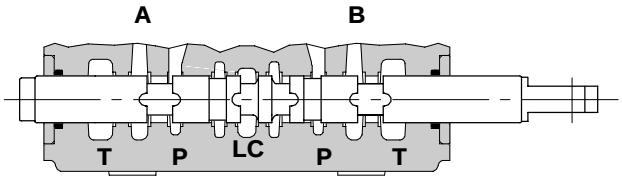

P → A B → T

▶ stroke:
+ 7 mm / *0.28 in*

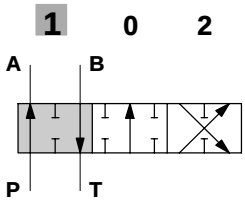

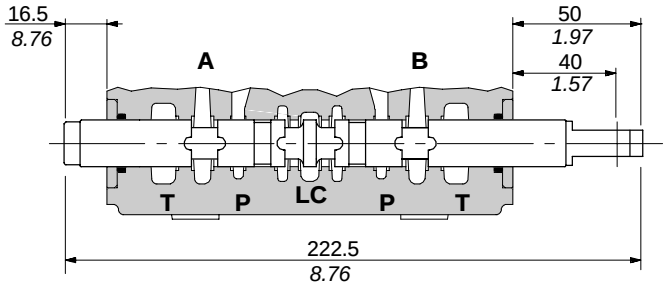

P-A-B-T closed, with flow through line (LC) open

◀ ▶

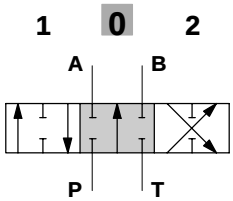

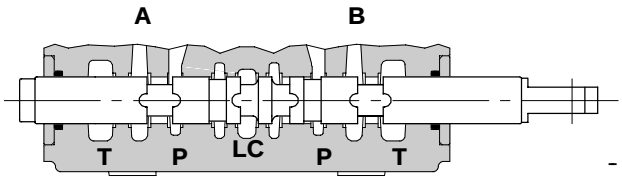

P→ B A → T

◀ stroke:
- 7 mm / *0.28 in*

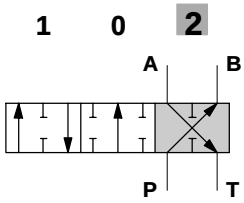

Performance data

Spool metering P→A(B)

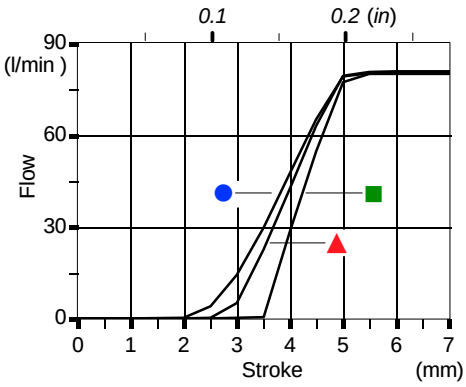

Qin = 80 l/min

- ● $P_{(on\ ports)}$ = 63bar/*900psi*
- ▲ $P_{(on\ ports)}$ = 100bar/*1450psi*
- ■ $P_{(on\ ports)}$ = 250bar/*3600psi*

Spool metering A(B)→T

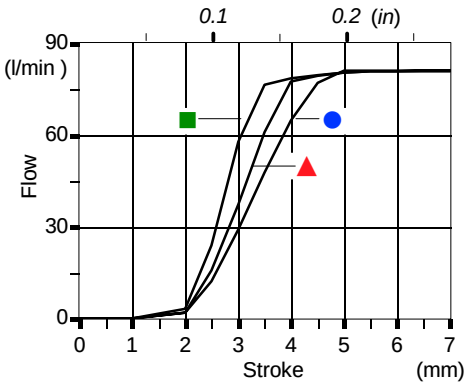

Spools

Type 2

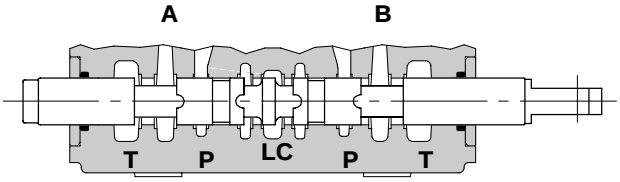

P closed, A-B→T, with flow through line (LC) open

+ 7 mm / + *0.28 in*
(1) ▶
◁ ▷ (0)
◀ (2)
- 7 mm / - *0.28 in*

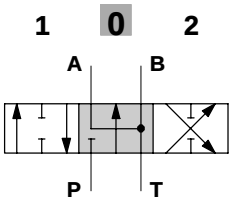

Type 2H

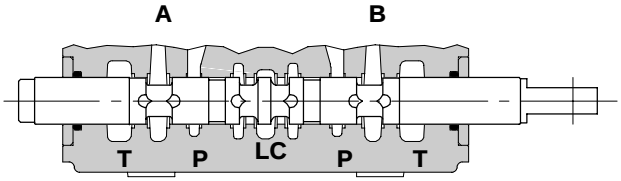

P closed, A-B partially to T, with flow through line (LC) open

+ 7 mm / + *0.28 in*
(1) ▶
◁ ▷ (0)
◀ (2)
- 7 mm / - *0.28 in*

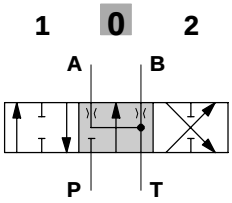

Type 3

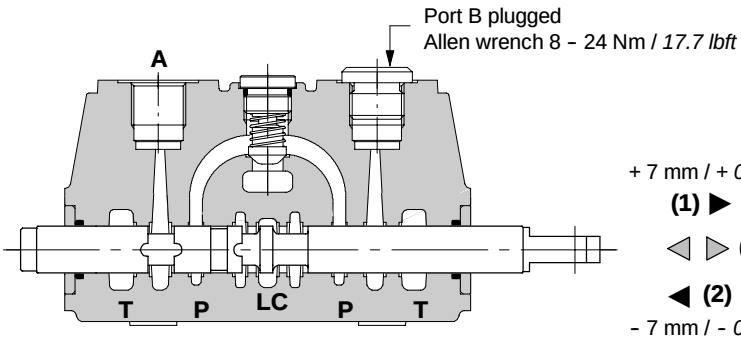

P-A-T closed, with flow through line (LC) open

+ 7 mm / + *0.28 in*
(1) ▶
◁ ▷ (0)
◀ (2)
- 7 mm / - *0.28 in*

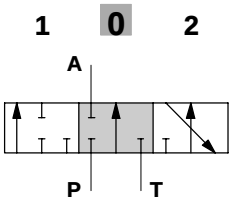

Type 4

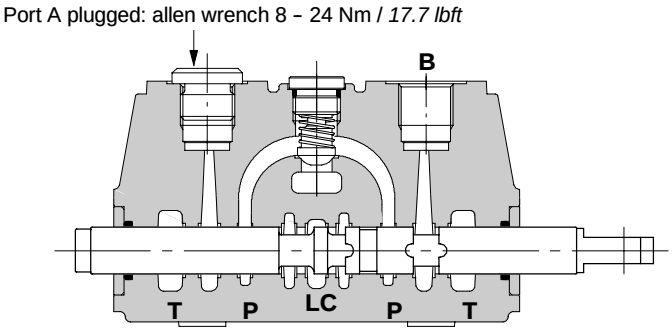

P-B-T chiusi, libera circolazione (LC) aperta

+ 7 mm / + *0.28 in*
(1) ▶
◁ ▷ (0)
◀ (2)
- 7 mm / - *0.28 in*

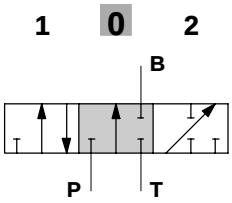

Spools

Type 8P

This spool needs special body with extra machinering; contact Sales Department.

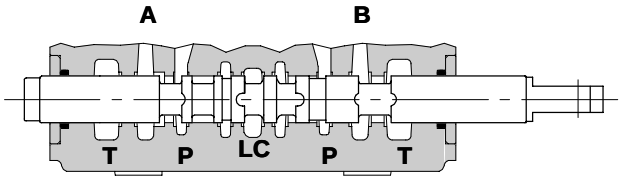

P → A B → T

▶ stroke:
+ 7 mm / *0.28 in*

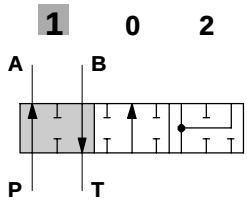

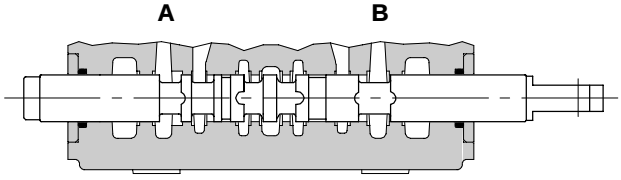

P-A-B-T closed, with flow through line (LC) open

◀ ▶

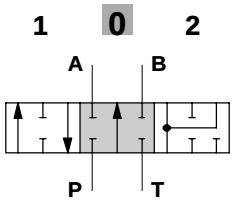

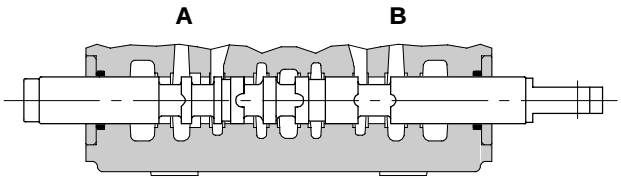

P→A+B (regenerative)

◀ stroke:
- 7 mm / *0.28 in*

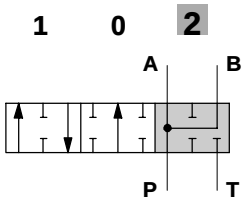

Performance data

Spool metering P→A

(Q = 80 l/min)

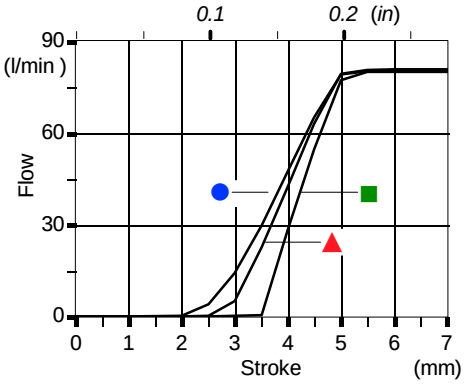

Qin = 80 l/min

- ● $P_{(on\ ports)}$ = 63bar/*900psi*
- ▲ $P_{(on\ ports)}$ = 100bar/*1450psi*
- ■ $P_{(on\ ports)}$ = 250bar/*3600psi*

Spool pressure drop A→B

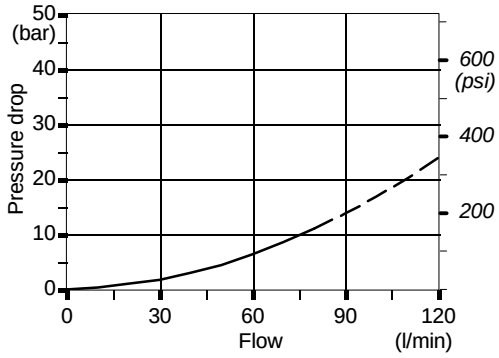

Spools

Type 5

This spool must be used only with spool positioner type **13**, **13MGF(NO)**, **13K** (see page 30) or **13IM** control (see page 39).

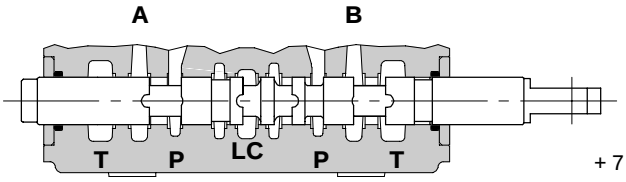

stroke:
+ 7 mm / *0.28 in*

P → A B → T

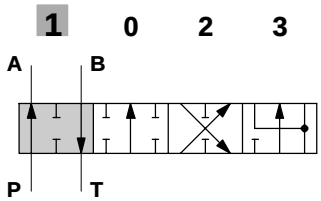

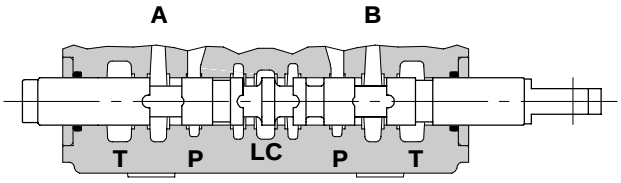

P-A-B-T closed, flow through line (LC) open

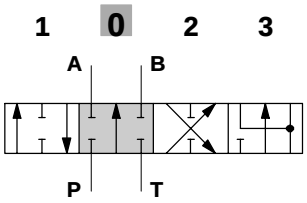

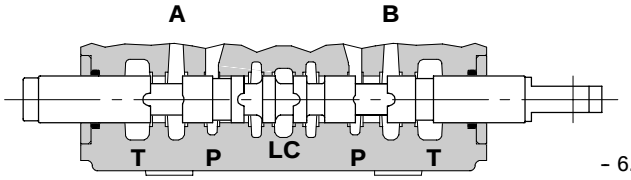

stroke:
- 6.7 mm / *0.26 in*

P→ B A → T

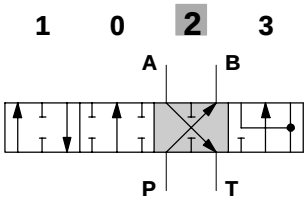

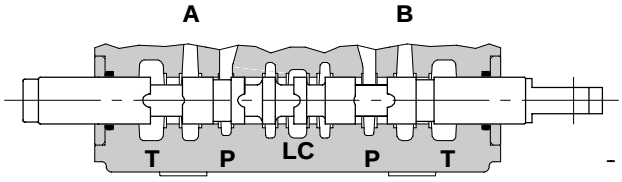

stroke:
- 12 mm / *0.47 in*

A(B) → T (floating)

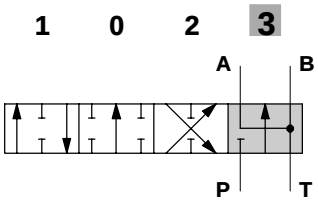

Performance data

Spool metering

Qin = 80 l/min / $P_{(on\ ports)}$ = 100 bar / *1450 psi*

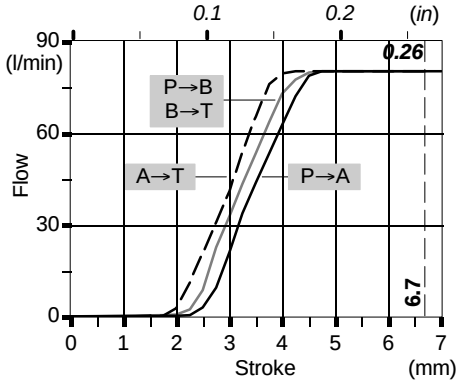

Pressure drop in position 3

(in last section)

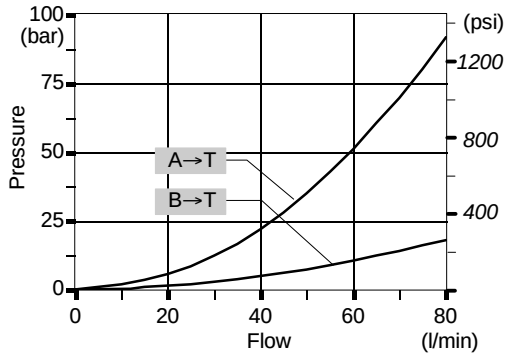

Spools

Type 5BCS

This spool must be used only with spool positioner type **13C** and **13CMGF** (see page 30).

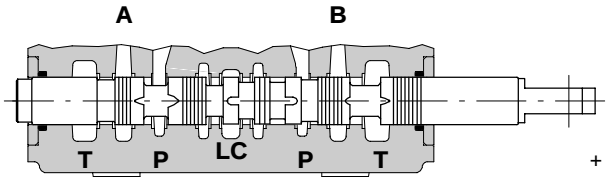

stroke:
+ 12 mm / *0.47 in*

A(B) → T (flottante)

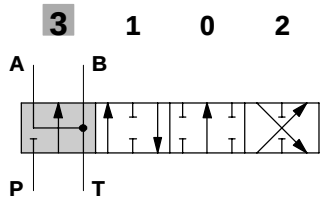

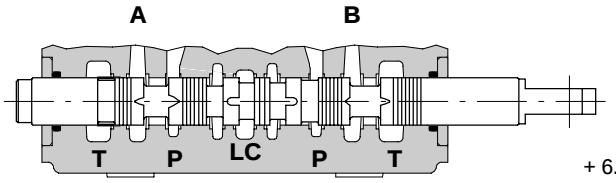

stroke:
+ 6.7 mm / *0.26 in*

P → A B → T

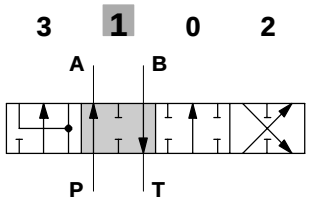

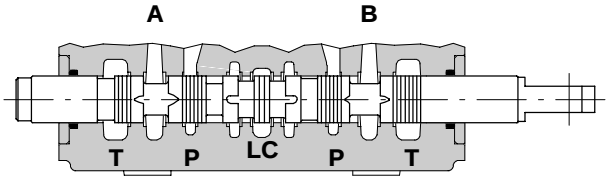

P-A-B-T chiusi, con libera circolazione (LC) aperta

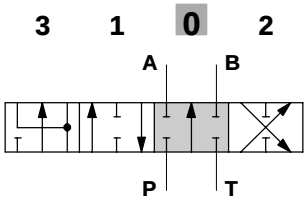

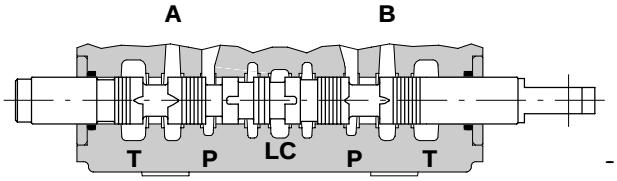

stroke:
- 7 mm / *0.28 in*

P → B A → T

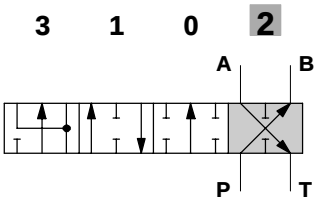

Performance data

Spool metering

Qin = 80 l/min / $P_{(on\ ports)}$ = 100 bar / *1450 psi*

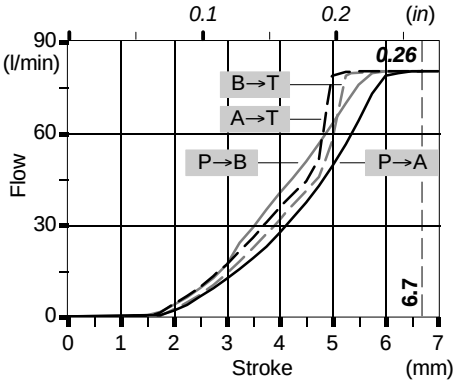

Pressure drop in position 3

(in last section)

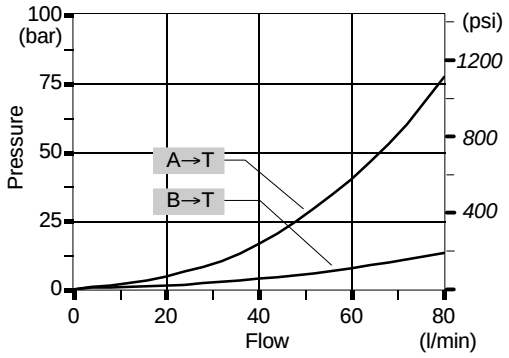

With spring return in neutral position

8 kit

Supplied with standard spring type B (see force-stroke diagram).
Available with lighter spring type A (**8MA** code: 5V08108240) or heavier type C (**8MC** code: 5V08208000).

1	**0**	2

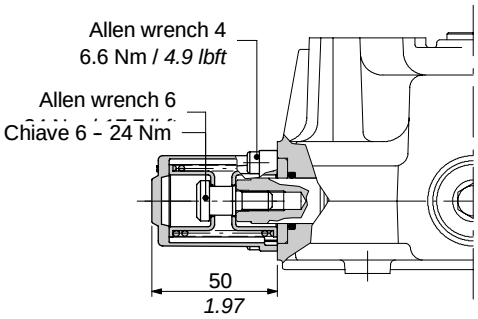

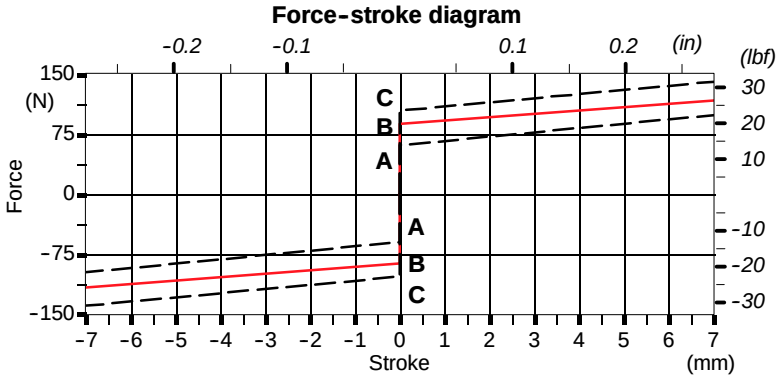

8D kit

1	**0**	2

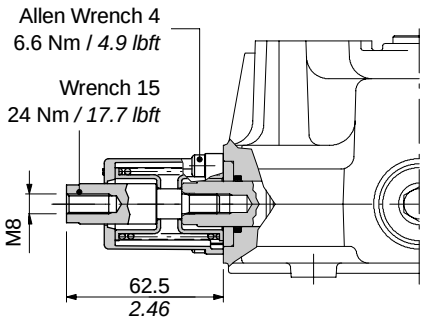

8D1 kit

1	**0**	2

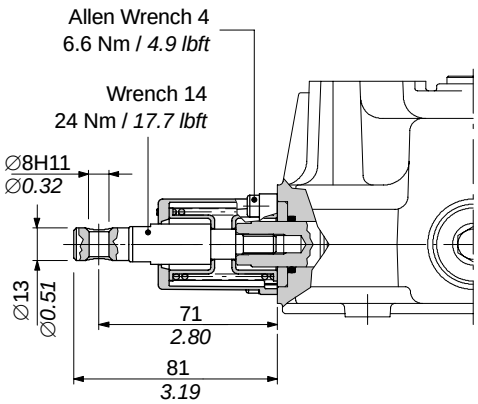

“A” side spool positioners

With detent and spring return to neutral position from either directions

9B kit

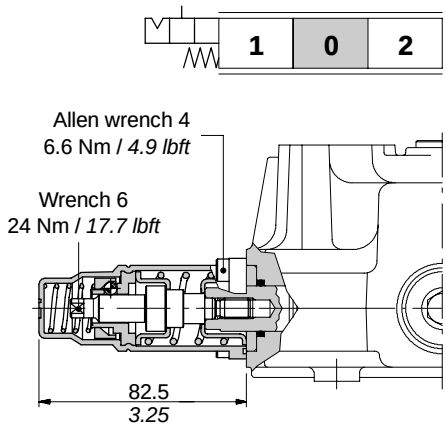

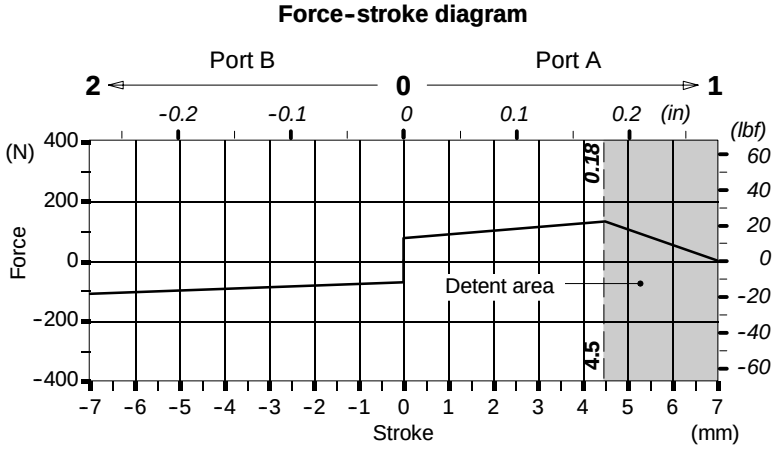

Locking force: 130 N / *29.2 lbf* ±10% – Release force: 215 N / *48.3 lbf* ±10%

10B kit

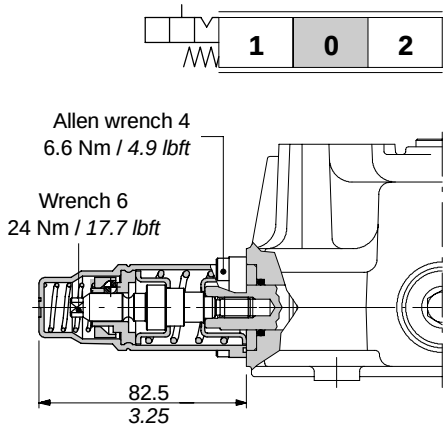

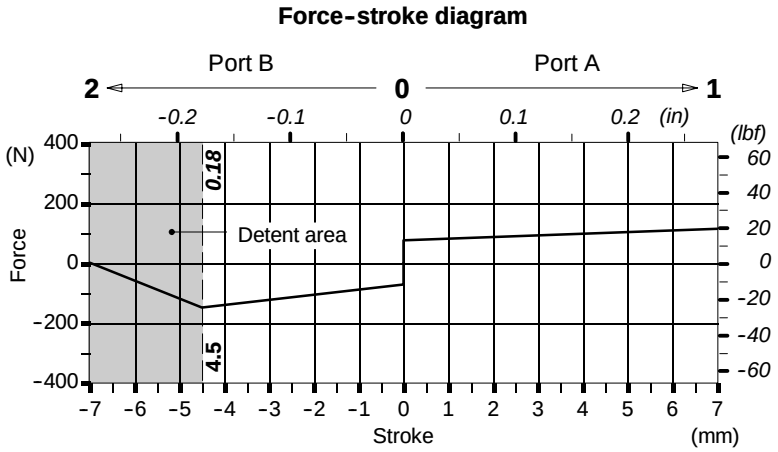

Locking force: 145 N / *32.6 lbf* ±10% – Release force: 300 N / *67.4 lbf* ±10%

11B kit

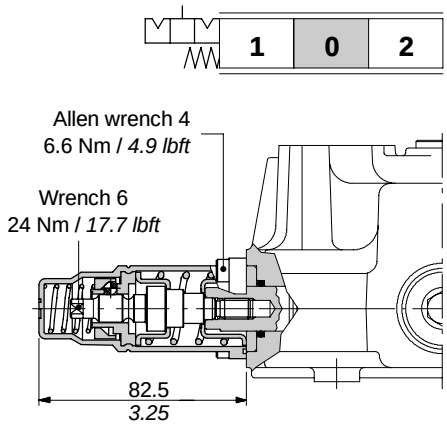

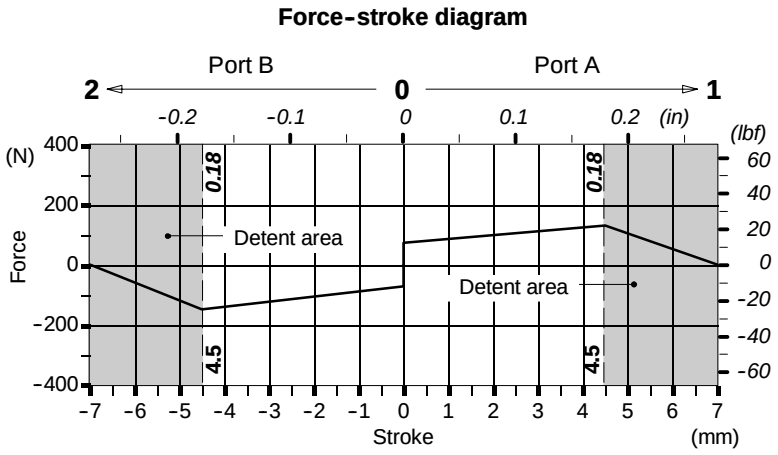

Position 1: Locking force: 130 N / *29.2 lbf* ±10% – Release force: 215 N / *48.3 lbf* ±10%
Position 2: Locking force: 145 N / *32.6 lbf* ±10% – Release force: 300 N / *67.4 lbf* ±10%

Solenoid lock device type 8K

With spring return and spool electromechanical lock in neutral position; when coil is feeded the spool can be moved.
It’s possible to obtain further control configurations, using positioners with detent type 9B, 10B, 11B: for information contact Sales Department.

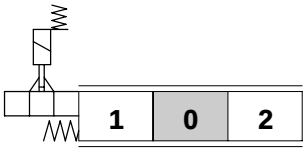

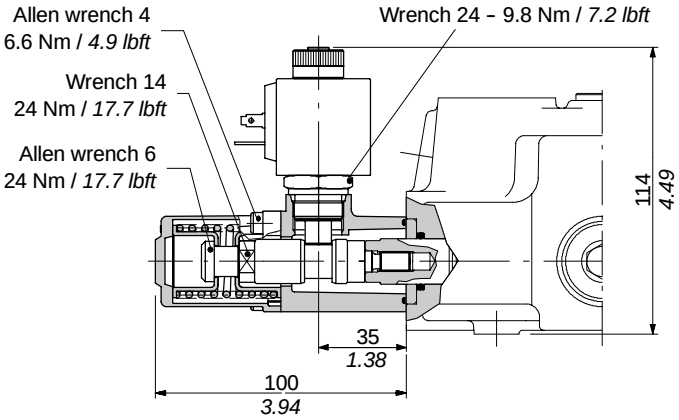

NOTE - *kit assembling has to be confirmed/verified when port relief valves are used: contact Sales Department.*

Operating features

ACTUATOR

Lock stroke . . . . . : 3.5 mm / *0.14 in*

COIL

Depending on model: see following features

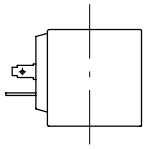

Coil with ISO4400 connector

Nom. voltage tolerance . . . . . : ±10%
Power rating . . . . . : 18 W
Nominal current . . . . . : 1.58 A - 12 VDC
: 0.81 A - 24VDC
Coil insulance . . . . . : Class F
Weather protection . . . . . : IP65
Duty cycle . . . . . : 100%

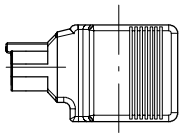

Coil with Deutsch DT connector

Nom. voltage tolerance . . . . . : ±10%
Power rating . . . . . : 22 W
Nominal current . . . . . : 1.9 A - 12 VDC
: 0.95 A - 24VDC
Coil insulance . . . . . : Class H
Weather protection . . . . . : IP65
Duty cycle . . . . . : 100%

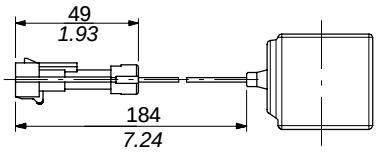

Coil with Packard M-Pack connector

Nom. voltage tolerance . . . . . : ±10%
Power rating . . . . . : 18 W
Nominal current . . . . . : 1.58 A - 12 VDC
: 0.81 A - 24VDC
Coil insulance . . . . . : Class F
Weather protection . . . . . : IP65
Duty cycle . . . . . : 100%

COMPLETE CONTROLS CODES

	CONNECTOR TYPE		
	ISO4400	Deutsch DT	Packard M-Pack
	CONTROL TYPE		
Voltage	**8K**	**8K4**	**8K6**
12 VDC	5V08708112	5V08708413	5V08708612
24 VDC	5V08708124	5V08708424	5V08708624
Need connector (page 58)	C02	C19	C20

COIL CODES

	CONNECTOR TYPE		
Voltage	**ISO4400**	**Deutsch DT**	**Packard M-Pack**
12 VDC	2X4300012	2X4300014	YSOL300014
24 VDC	2X4300024	2X4300026	YSOL300024

“A” side spool positioners

With microswitch type 8MG3(NO)

With spring return in neutral position and microswitch operated in both directions.
Also available **8MG1(NO)** configuration (microswitch operated in position 1) and **8MG2(NO)** configuration (microswitch operated in position 2); dimensions are the same of 8MG3 configuration.
Same configurations are available with normally closed (NC) contact.
It’s possible to obtain further control configurations, using positioners with detent type 9B, 10B, 11B: for information contact Sales Department.

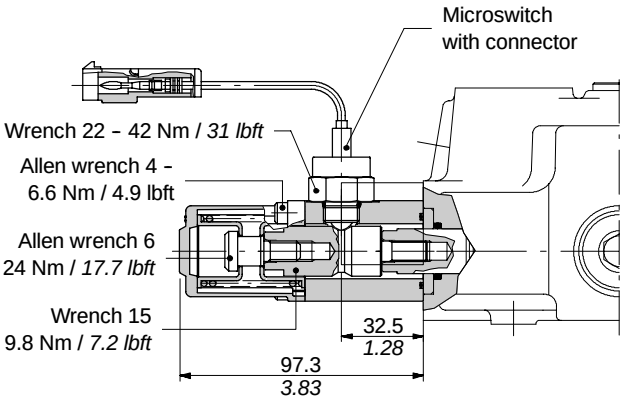

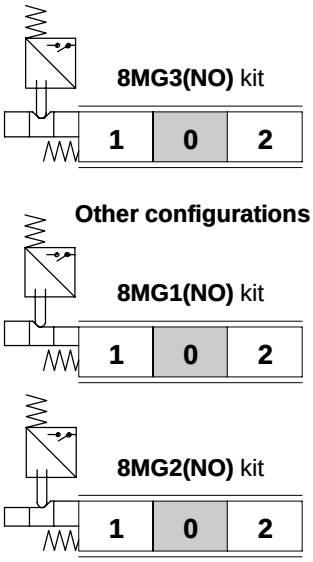

Operating features

MICROSWITCH

Mechanical life . . . . . : $5x10^5$ operations
Electrical life (resistive load) : 10^5 operations – 7A / 13.5VDC
: $5x10^4$ operations – 10A / 12VDC
: $5x10^4$ operations – 3A / 28VDC

COMPLETE CONTROLS CODES

Contact	CONTROL TYPE 8MG3	CONTROL TYPE 8MG2	CONTROL TYPE 8MG1	Need connector type	
NO	5V08108150	5V08108170	5V08108160	C07	see page 58
NC	5V08108152	5V08108172	5V08108162	C17	

SPARE MICROSWITCHES

Microswitch kit with NO contact code: 4MIC730

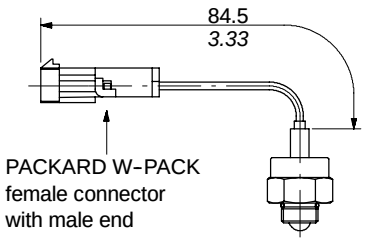

Microswitch kit with NO contact code: 4MIC740

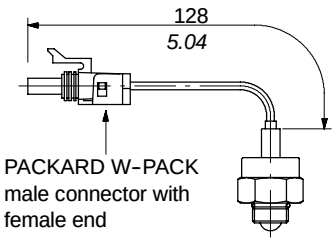

ON/OFF electrohydraulic kit type 8ED3

With external pilot and drain.

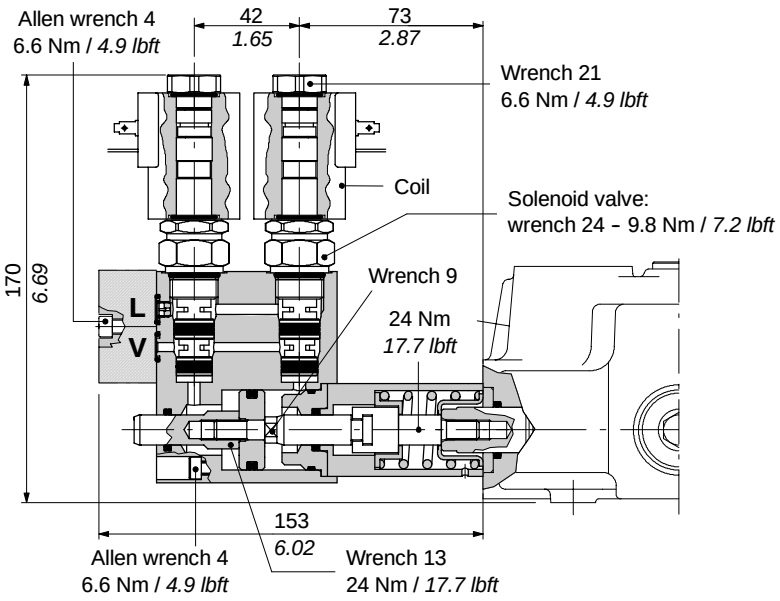

Scheme

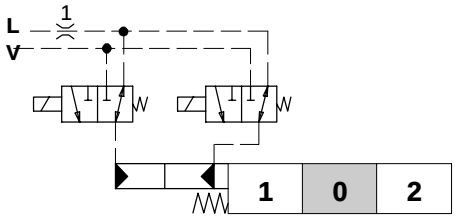

Scheme ISO 1219

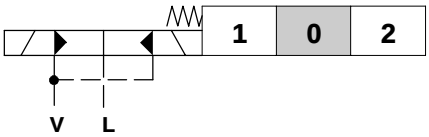

Operating features

CONTROL

Pilot pressure . . . . . : min. 10 bar / *145 psi*
: max. 50 bar / *725 psi*

Max backpressure on drain L . . . . . : 25 bar / *360 psi*

COIL

Nominal voltage tolerance . . . . . : ±10%
Power rating . . . . . : 21 W
Nominal current . . . . . : 1.75 A – 12 VDC / 0.87 A – 24VDC
Coil insulation . . . . . : Class F
Weather protection . . . . . : depending on coil model: see next page
Duty cycle . . . . . : 100%

COMPLETE CONTROLS CODES

	CONNECTIO TYPE			
	ISO4400	AMP JPT		Deutsch DT
		without diode	with diode	
	CONTROL TYPE			
Voltage	**8ED3**	**8ED32**	**8ED32D**	**8ED34**
12 VDC	5V08108360	5V08108358	5V08108356	5V08108348
24 VDC	5V08108361	5V08108359	5V08108357	5V08108349
Need connector type (page 58)	C02	C08	C08	C19

“A” side spool positioners

ON/OFF electrohydraulic kit type 8ED3

COIL CODES

Voltage	CONNECTION TYPE			
	ISO4400	AMP JPT		Deutsch DT
		without diode	with diode	
12 VDC	2XB1400121100	2XB1400121200	2XB1400121210	2XB1400120400
24 VDC	2XB1400241100	2XB1400241200	2XB1400241210	2XB1400240400

Coil with ISO4400 connection
(weather protection IP65)

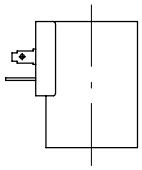

Coil with AMP JPT connection
(weather protection IP65)

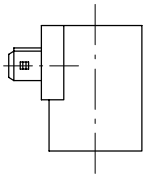

Coil with Deutsch DT connection
(weather protection IP67)

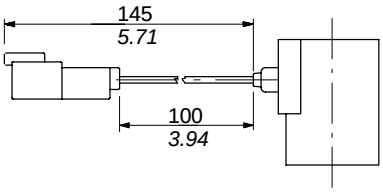

Collector kit for external pilot and drain

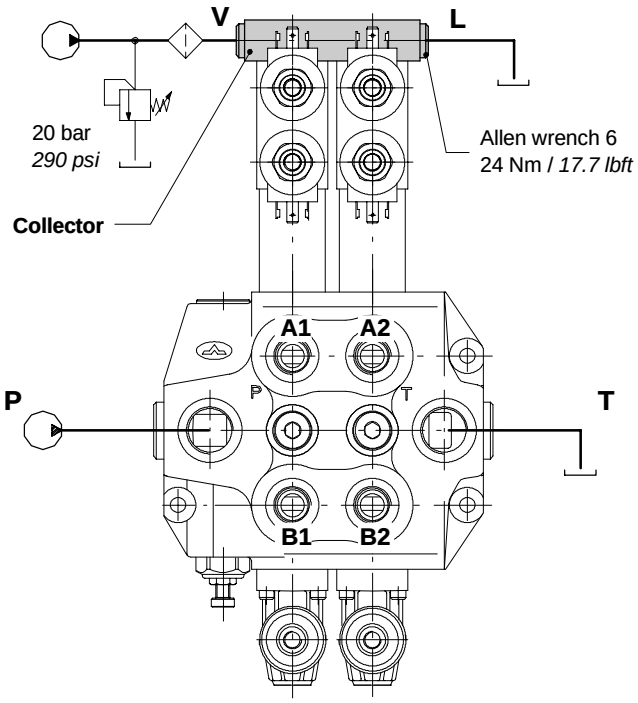

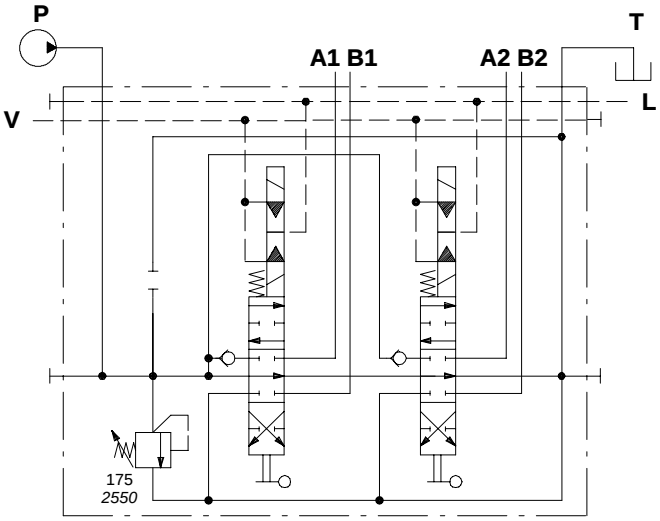

Description example:
SDM140/2-P(YG3-175)/1**8ED3**L/1**8ED3**L/PSA-**KE2S0-24VDC**

COLLECTOR KIT CODES

Type	Code *	Description
KE1S0	5KE1S00030	Kit per una sezione
KE2S0	5KE2S00430	Kit per 2 sezionI
KE3S0	5KE3S00430	Kit per 3 sezionI
KE4S0	5KE4S00430	Kit per 4 sezionI
KE5S0	5KE5S00430	Kit per 5 sezionI
KE6S0	5KE6S00430	Kit per 6 sezionI

(*) codes are referred to BSP thread

ON/OFF electrohydraulic kit type 8ED3

Collector with pilot and drain

The kit consists of a collector with **VRP** pressure reducing valve and relative pipes: this kit can be used only with **SDM140** directional valve.

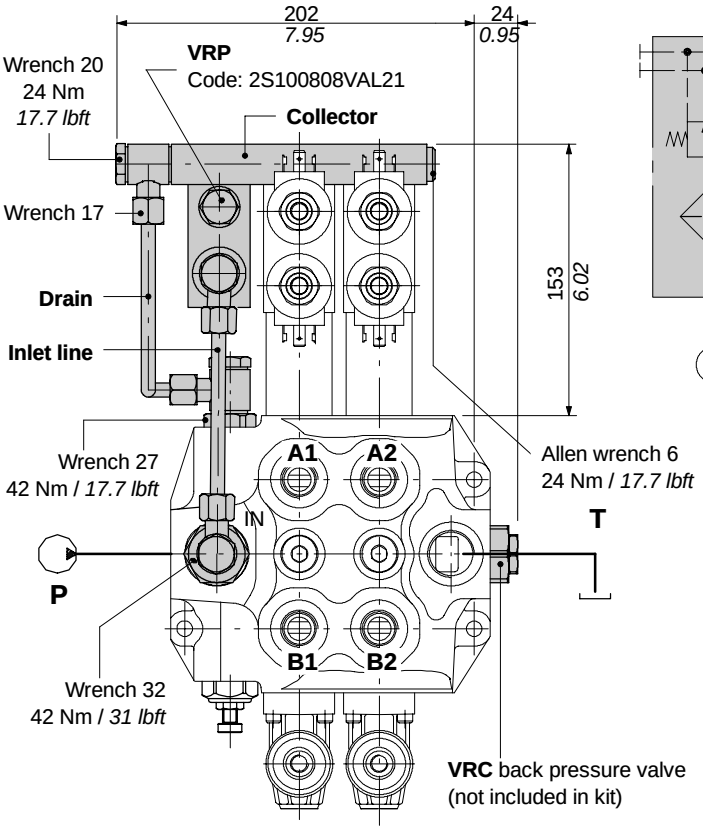

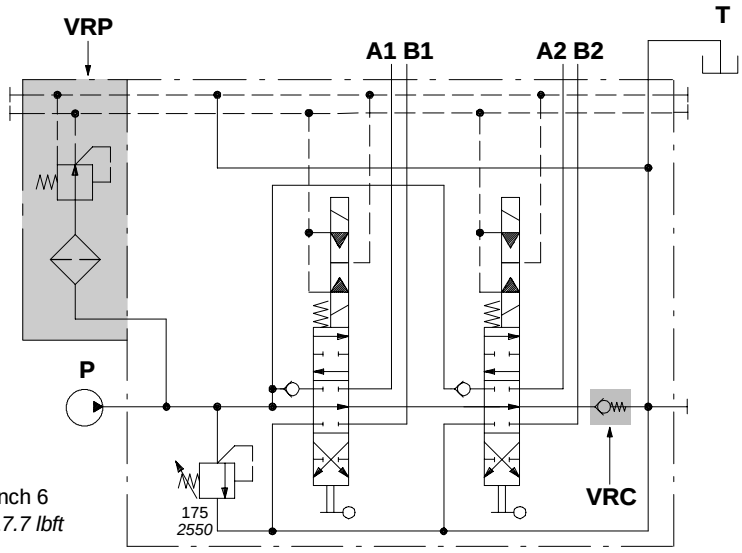

Description example:
SDM140/2-P(YG3-175)/1**8ED3**L/1**8ED3**L/**VRC-KE2R3-24VDC**

COLLECTOR KIT CODES

Type	Code *	Description
KE1R3	5KE1R30330	Kit per una sezione
KE2R3	5KE2R30330	Kit per 2 sezionI
KE3R3	5KE3R30330	Kit per 3 sezionI
KE4R3	5KE4R30330	Kit per 4 sezionI
KE5R3	5KE5R30330	Kit per 5 sezionI
KE6R3	5KE6R30330	Kit per 6 sezionI

(*****) Codes are referred to BSP thread

Operating features

VRP VALVE

Output pressure . . . . . : 20 bar / *290 psi*
Max flow . . . . . : 8 l/min
Filtering . . . . . : 80 μ

VRC backpressure valve: code X147600007

Valve assembled on flow through passage provides pilot pressure to the actuator and ca be used only with **SDM140** directional valve.
Also available **VRC(10)** configuration: code **X147600010** (see diagram).

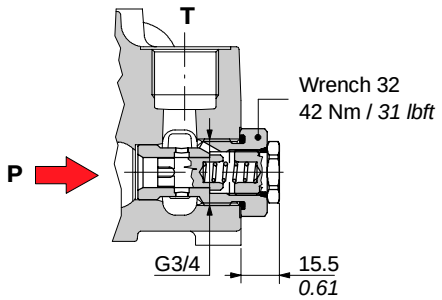

Pressure drop P→T

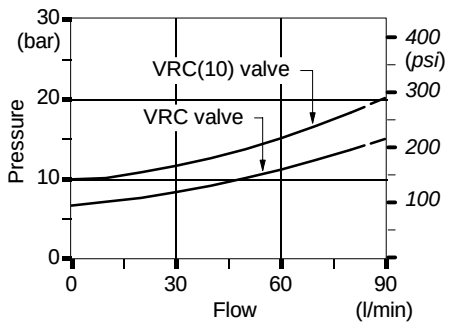

“A” side spool positioners

ON/OFF pneumatic kit type 8EPG3

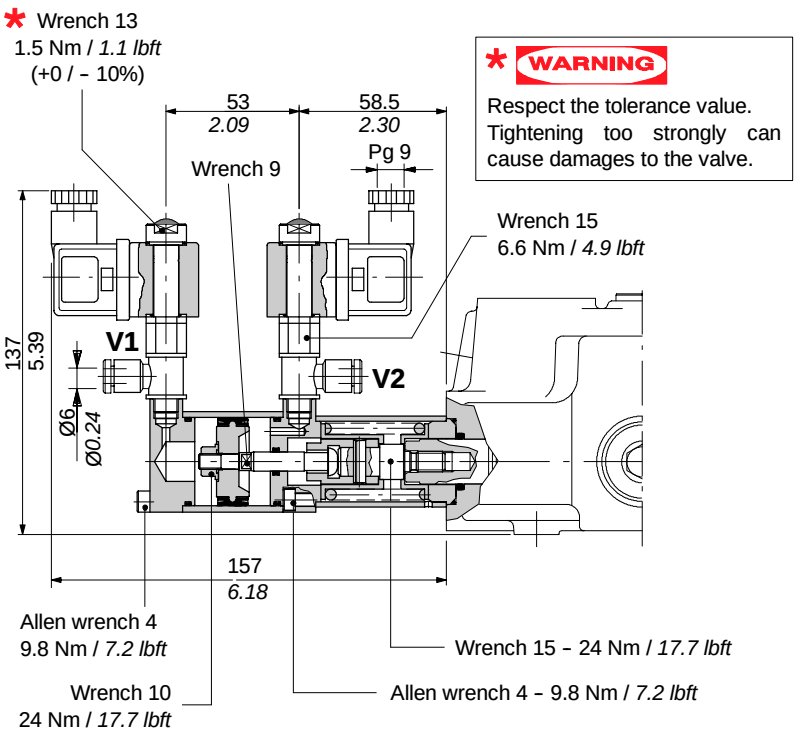

*** WARNING**

Respect the tolerance value. Tightening too strongly can cause damages to the valve.

Scheme

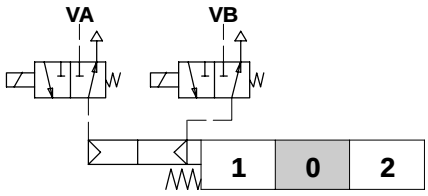

Scheme ISO 1219

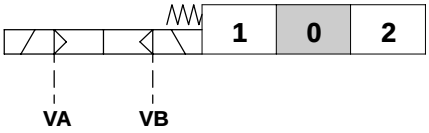

COMPLETE CONTROL CODES

	CONNECTION TYPE	
	ISO6952	Fili uscenti
	CONTROL TYPE	
Voltage	8EP3	8EP35
12 VDC	5V08108737	5V08108739
24 VDC	5V08108742	5V08108744
Need connector type (pagE 58)	C01 (compreso)	/

COILS CODES

Voltage	CONTROL TYPE	
	ISO6952	Flying leads*
12 VDC	2XB1010121100	2XB1010120000
24 VDC	2XB1010241100	2XB1010240000

* Several type of connectors can be wired on request

Operating features

CONTROL

Pilot pressure . . . . . : 6 bar / *87 psi*
: (max.12 bar / *174 psi*)

COIL

Nominal voltage tolerance . . . . : ±10%
Power rating . . . . . : 8 W
Nominal current . . . . . : 0.67 A – 12 VDC
: 0.33 A – 24VDC
Coil insulation . . . . . : Class H
Weather protection . . . . . : IP65
Duty cycle . . . . . : 100%

Coil with ISO6952 connector

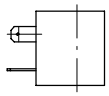

Coil with flying leads

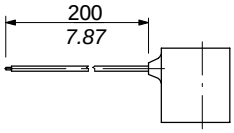

“A” side spool positioners

Proportional pneumatic kit type 8PG

It can be used with standard spools and body; body kit without spool seals on side “A” (O-ring seal on spool in the drawing is part of positioner).

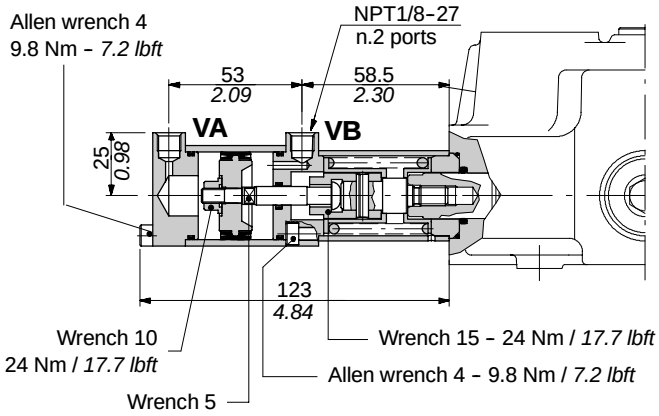

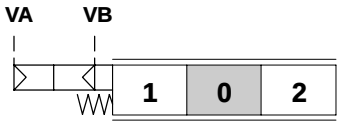

Operating features

Pilot pressure . . . . . : min. 6 bar / *87 psi*
: max. 12 bar / *174 psi*

Pilot pressure - stroke diagram

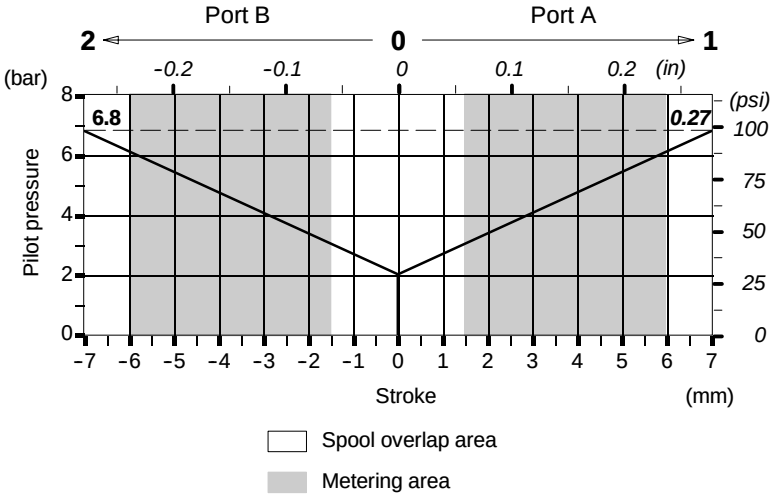

“A” side spool positioners

Particular positioner kits for special spools

13 kit

Detent in 4th position with spool in:available only for spool type **5.**

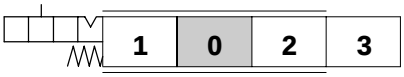

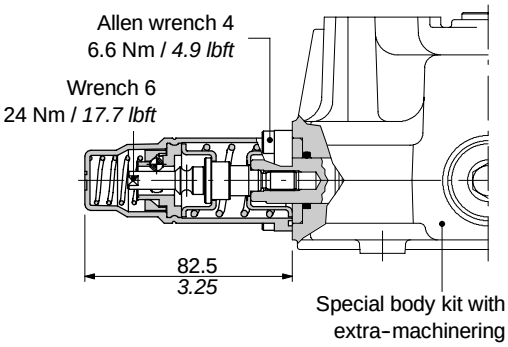

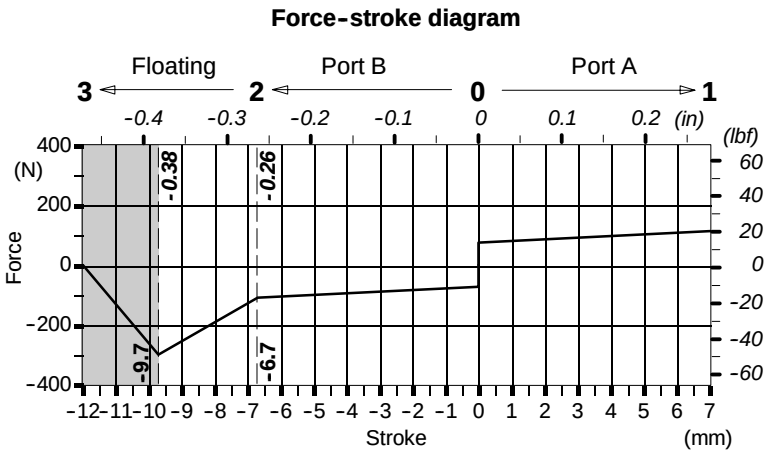

Detent area
Locking force: 300 N / *67.4 lbf* ±10%
Release force: 270 N / *60.7 lbf* ±10%

13C kit

Detent in 4th position with spool out:available only for spool type **5BCS**.

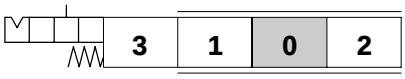

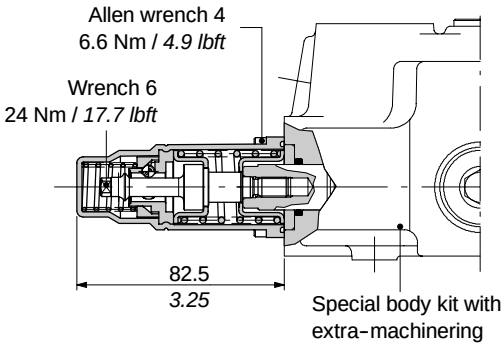

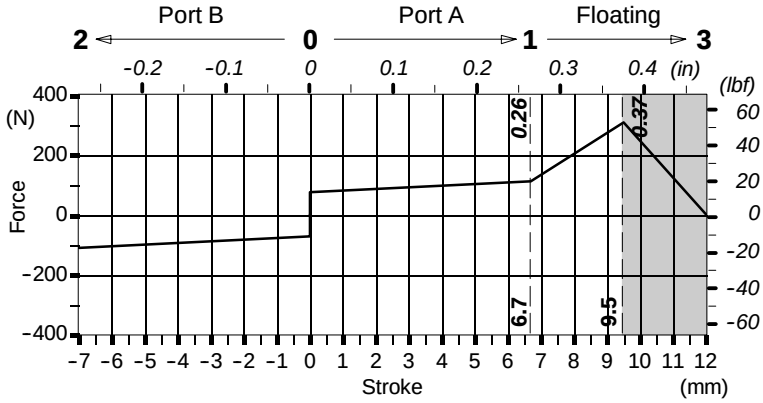

Detent area
Locking force: 310 N / *70 lbf* ±10%
Release force: 170 N / *38.2 lbf* ±10%

Particular positioner kits for special spools

13K kit

Same characteristics of kit type **13**, with spool electromechanical lock in neutral position; if coil is excited the spool can be operated. Available only for spool type **5.**

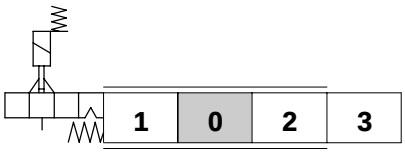

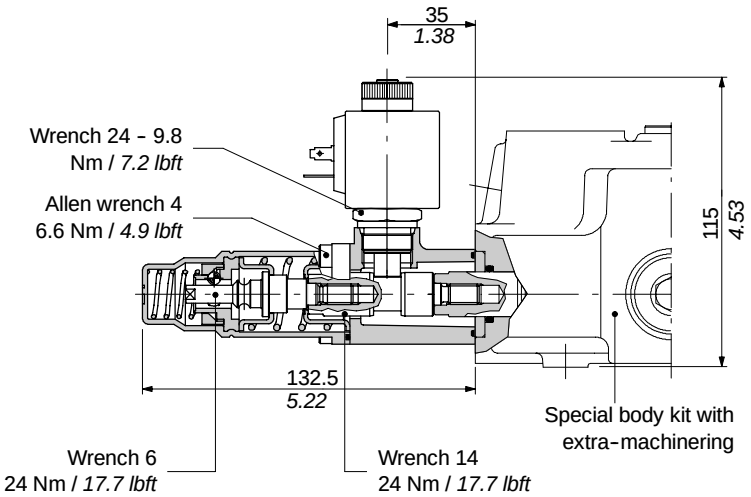

NOTE - *kit assembling has to be confirmed/verified when port relief valves are used: contact Sales Department.*

Operating features

POSITIONER

Locking force . . . . . : 300 N / *67.4 lbf* ±10%

Release force . . . . . : 270 N / *60.7 lbf* ±10%

ACTUATOR

Lock stroke . . . . . : 3.5 mm / *0.14 in*

COIL

Depending on model: see following features

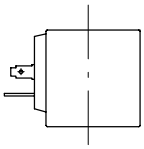

Coil with ISO4400 connector

Nom. voltage tolerance . . . . . : ±10%
Power rating . . . . . : 18 W
Nominal current . . . . . : 1.58 A - 12 VDC
: 0.81 A - 24VDC
Coil insulance . . . . . : Class F
Weather protection . . . . . : IP65
Duty cycle . . . . . : 100%

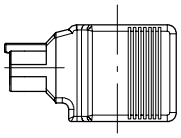

Coil with Deutsch DT connector

Nom. voltage tolerance . . . . . : ±10%
Power rating . . . . . : 22 W
Nominal current . . . . . : 1.9 A - 12 VDC
: 0.95 A - 24VDC
Coil insulance . . . . . : Class H
Weather protection . . . . . : IP65
Duty cycle . . . . . : 100%

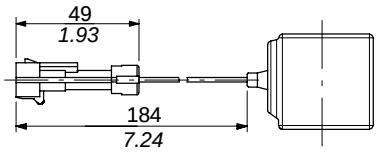

Coil with Packard M-Pack connector

Nom. voltage tolerance . . . . . : ±10%
Power rating . . . . . : 18 W
Nominal current . . . . . : 1.58 A - 12 VDC
: 0.81 A - 24VDC
Coil insulance . . . . . : Class F
Weather protection . . . . . : IP65
Duty cycle . . . . . : 100%

COMPLETE CONTROLS CODES

	CONNECTION TYPE		
	ISO4400	Deutsch DT	Packard M-Pack
	CONTROL TYPE		
Voltage	**13K**	**13K4**	**13K6**
12 VDC	5V13708113	5V13708413	5V13708612
24 VDC	5V13708124	5V13708424	5V13708624
Need connector type (page 58)	C02	C19	C20

COILS CODES

Voltage	CONNECTION TYPE		
	ISO4400	Deutsch DT	Packard M-Pack
12 VDC	2X4300012	2X4300014	YSOL300013
24 VDC	2X4300024	2X4300026	YSOL300025

“A” side spool positioners

Particular positioner kits for special spools

Kit 13MG3F(NO)

Detent in 4th position with spool in, spring return in neutral position and microswitch operated in both directions.
Also available **13MG1F(NO)** configuration (microswitch operated in position 1) and **13MG2F(NO)** configuration (microswitch operated in position 2); contact Sales Department.
Same configurations are available with normally closed (NC) contact.
Available only for spool type **5** (see page 19).

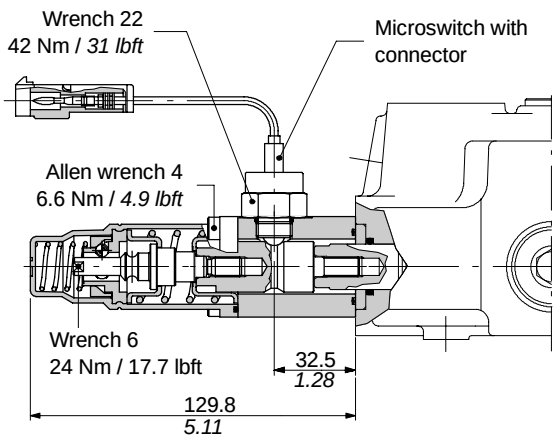

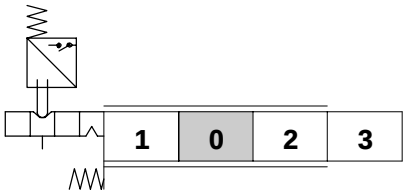

COMPLETE CONTROLS CODES

Contact	CONTROL TYPE 13MG3F	Need connector type	
NO	5V13108051	C07	see page 58
NC	5V13108052	C17	

NOTE - *for microswitches dimensions, features and characteristics, see page 24.*

13CMG3F(NO) kit

Detent in 4th position with spool out, spring return in neutral position and microswitch operated in both directions.
Also available **13CMG1F(NO)** configuration (microswitch operated in position 1) and **13CMG2F(NO)** configuration (microswitch operated in position 2); contact Sales Department.
Same configurations are available with normally closed (NC) contact.
Available only for spool type **5BCS** (see page 20).

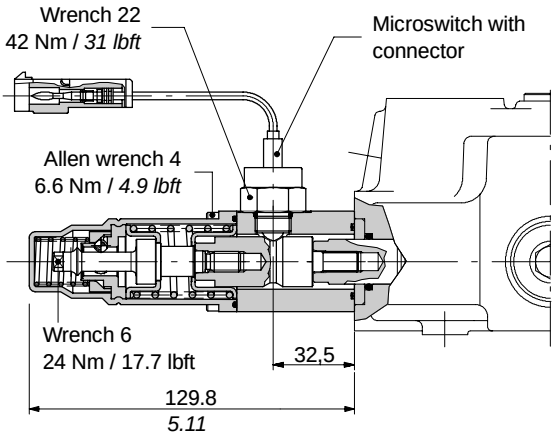

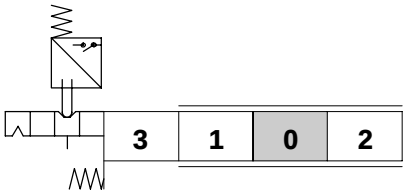

COMPLETE CONTROLS CODES

Contact	CONTROL TYPE 13CMG3F	Need connector type	
NO	5V13208050	C07	see page 58
NC	5V13208052	C17	

NOTE - *for microswitches dimensions, features and characteristics, see page 24.*

Lever control

Type L

Alluminium with protection boot lever pivot box; it can be rotated 180° (execution **L180**).

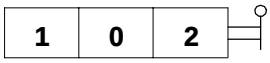

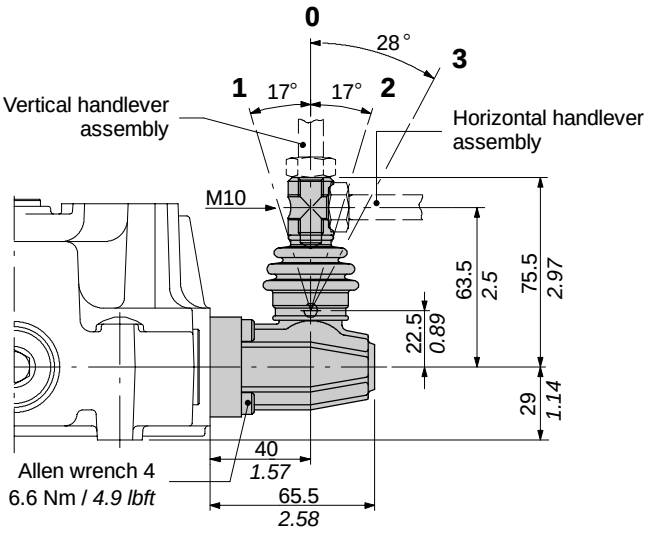

Configuration **L180**

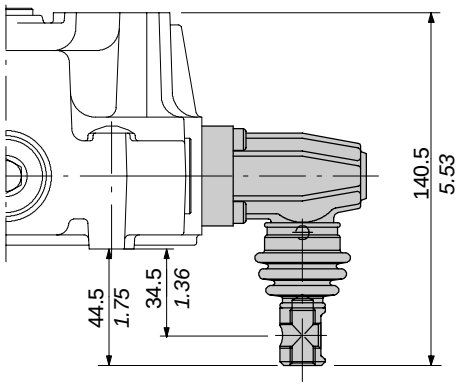

Type LF3

Zama (zinc alloy) lever pivot box with protective rubber bellow; it’s complete of two screws for spool stroke adjusting.
It can be rotated 180° (configuration **LF3180**).

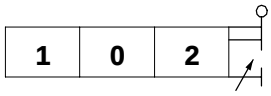

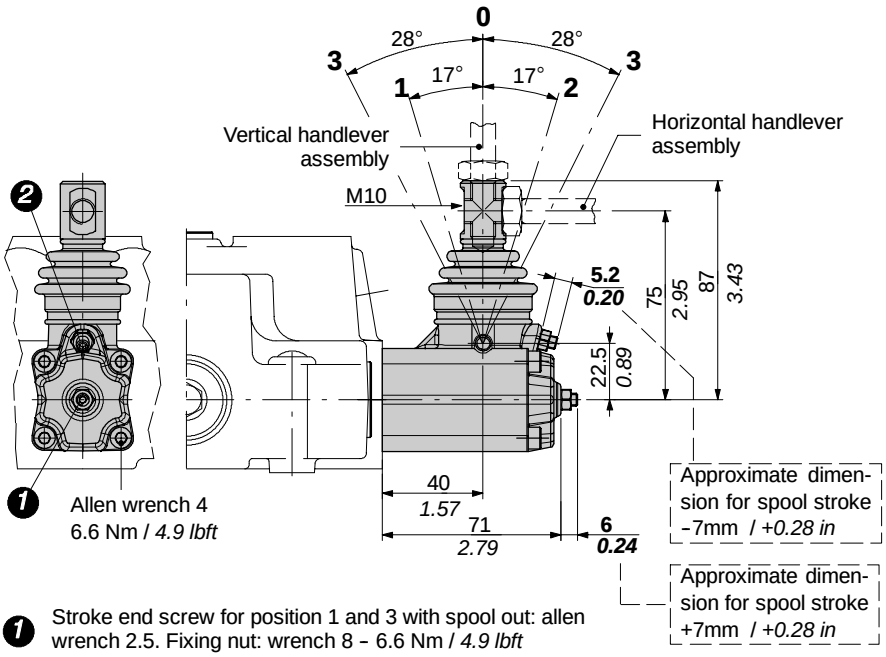

Configuration **LF3180**

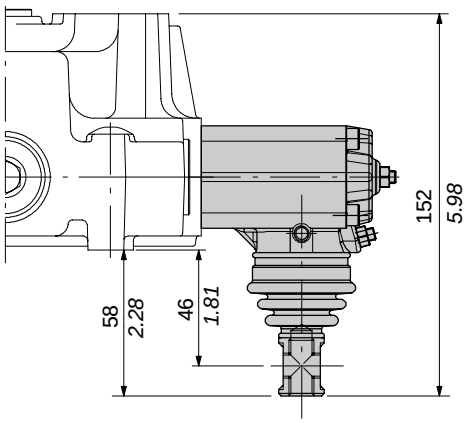

❶ Stroke end screw for position 1 and 3 with spool out: allen wrench 2.5. Fixing nut: wrench 8 – 6.6 Nm / *4.9 lbft*

❷ Stroke end screw for position 2 and 3 with spool in: allen wrench 2.5. Fixing nut: wrench 8 – 6.6 Nm / *4.9 lbft*

”B” side options

Lever control

Type LB

Steel and cast iron manufacture.

LB4 configuration: pivot placed above on the right.

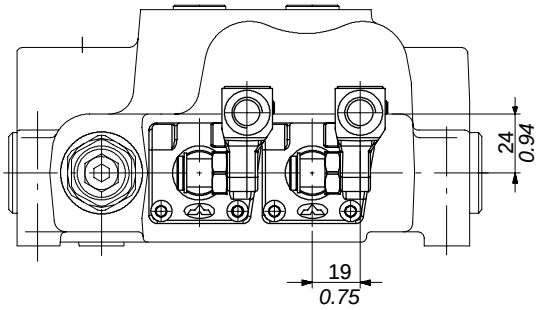

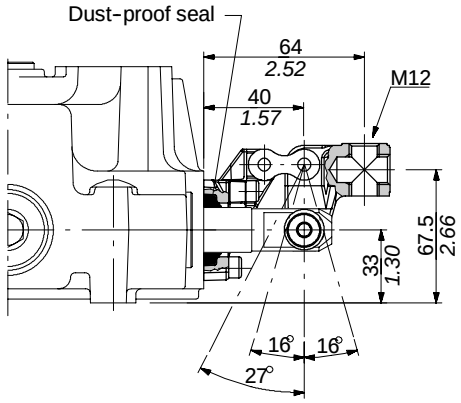

LB1 configuration: pivot placed down on the left.

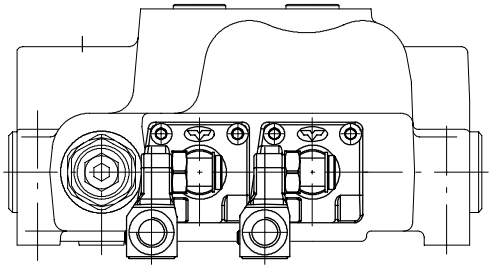

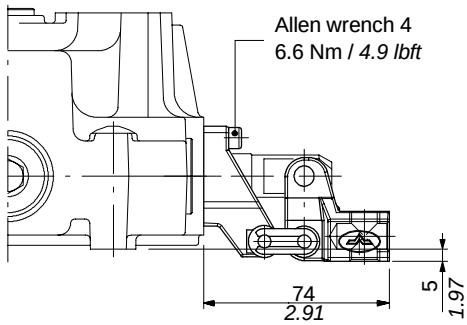

NOTE - *The pivot can be assembled rotated 90° in either directions; in this case the interference with other lever controls must be checked.*
For further information please contact Sales Department.

Controls prearrangement

Type SLP

Mechanical control with dust-proof plate kit.

1	0	2

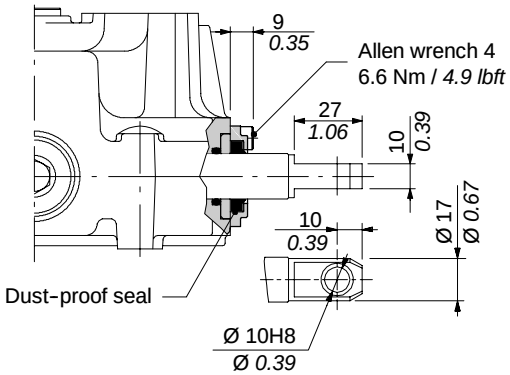

Type SLCY

Protection cap usable with pneumatic 8PF, electro-pneumatic 8EP3, and electro-hydraulic 8ED3 spool positioners.

1	0	2

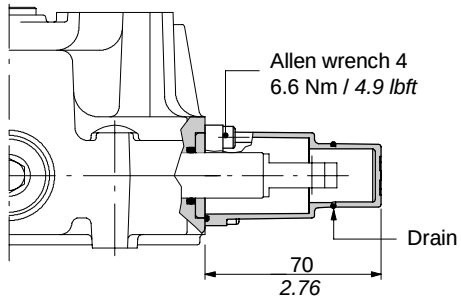

TQ cable remote control kit

Waterproof cap prearranged for remote control with flexible cable.

1	0	2

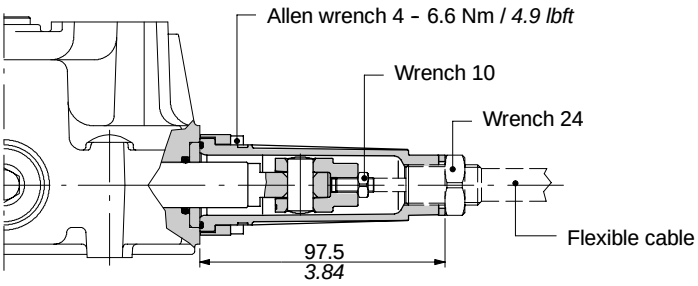

NOTE - *For further information about remote cable control, require related documentation.*

Example of cable control

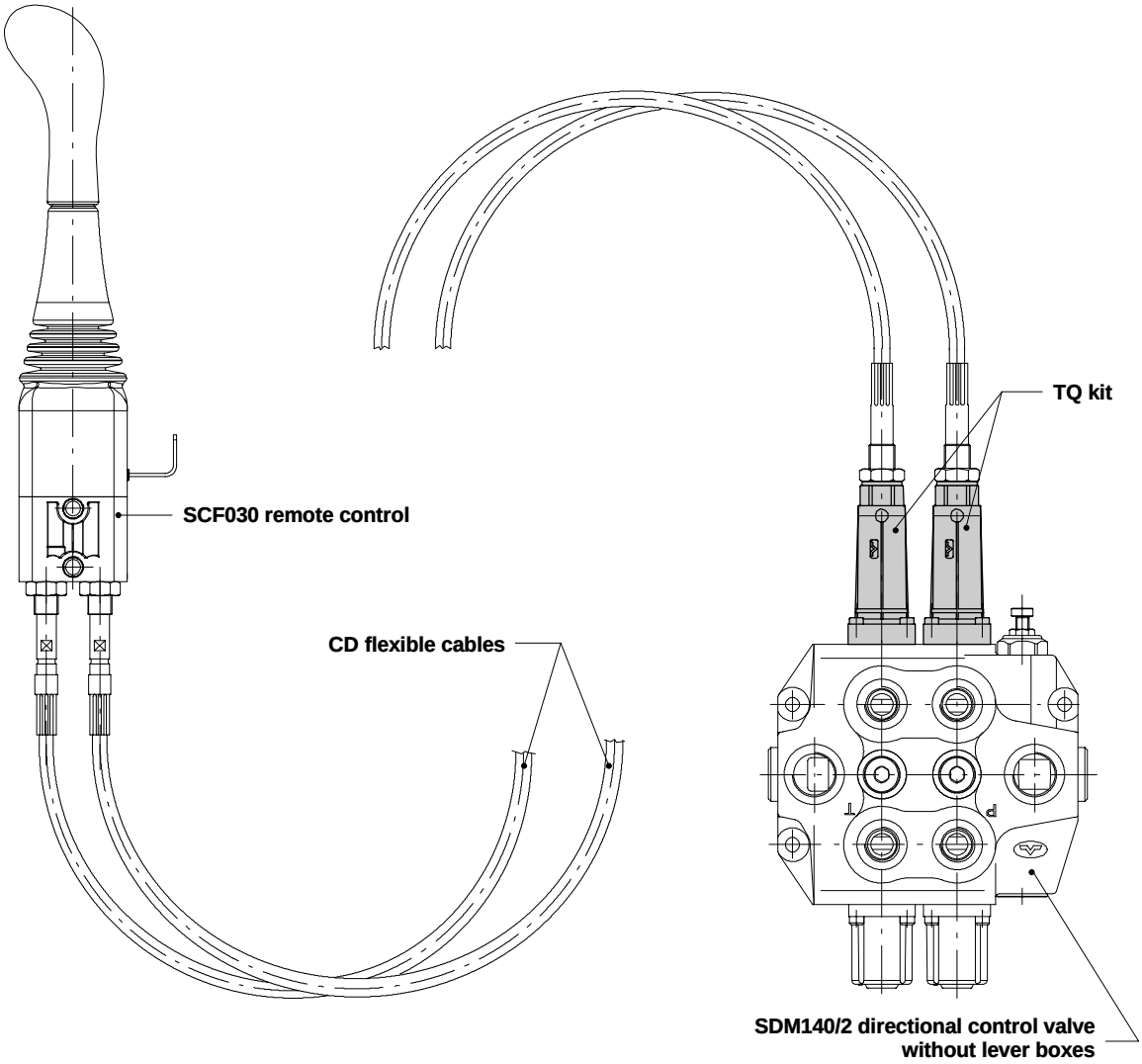

"B" side options

LCB joystick

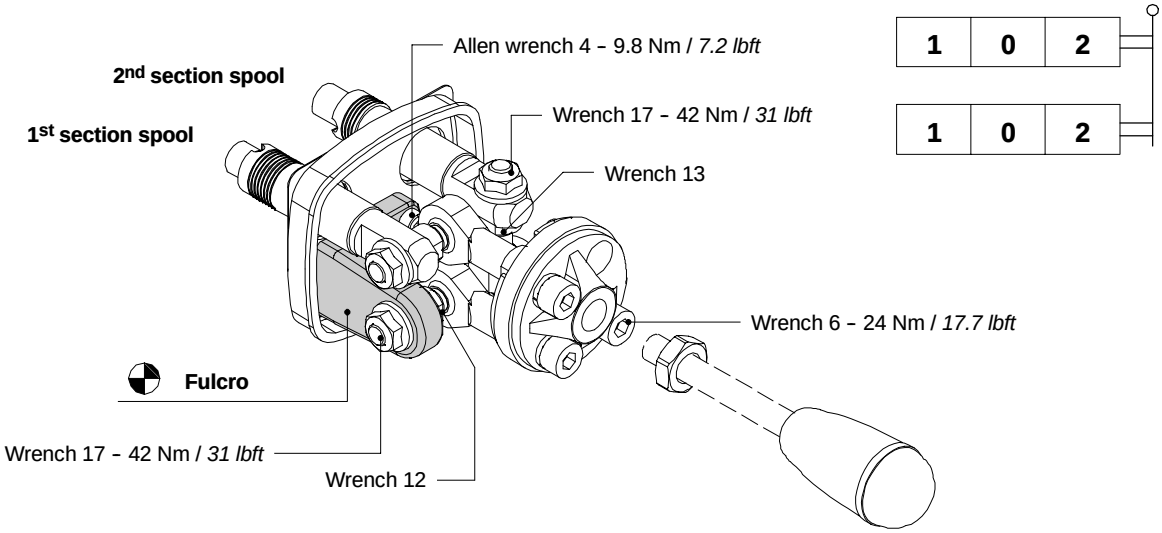

NOTE - *The handlever must be ordered separately (see page 11).*

Dimensions and movement scheme

Configuration **LCB1**
pivot placed down on the left

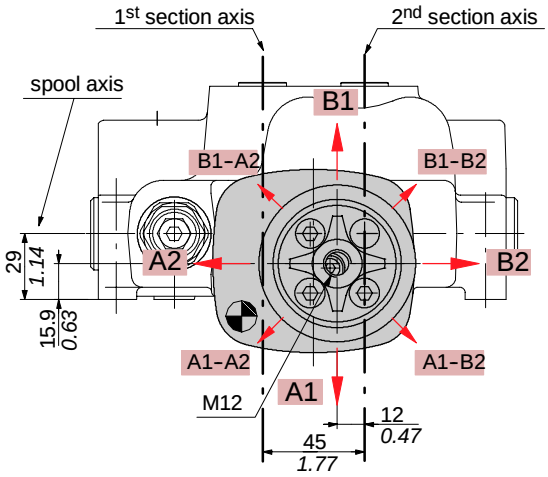

Configuration **LCB2**
pivot placed down on the right

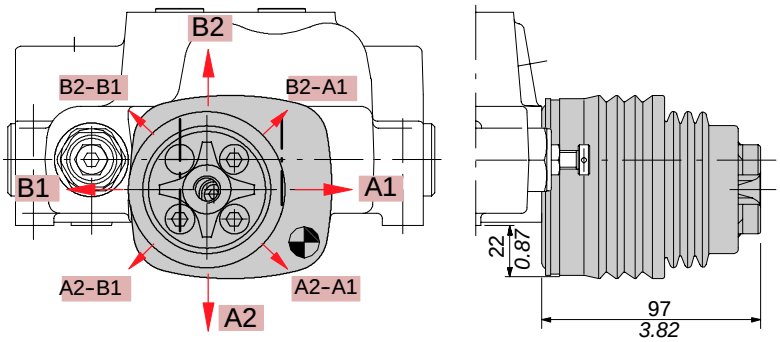

Configuration **LCB3**
pivot placed above on the left

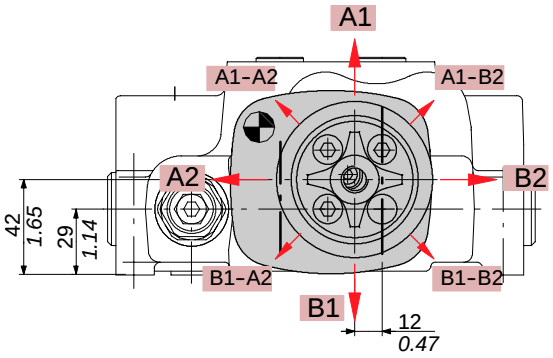

Cofiguration **LCB4**
pivot placde above on the right

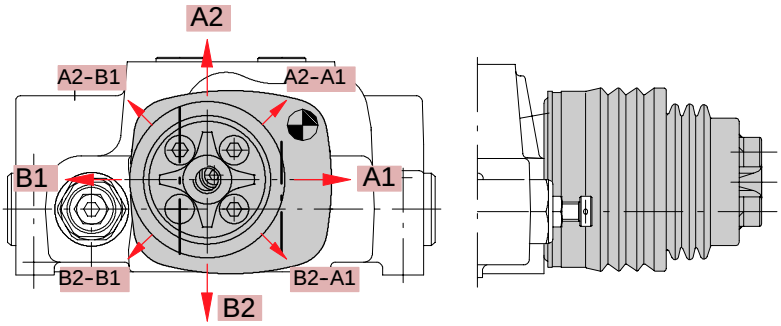

NOTE - *Due to limited space in case of LCB3 or LCB4 configuration the assembly of ports service relief valves is not possible.*

Proportional hydraulic control type 8IM

It can be used on **SDM140** valve with standard spools and body (body kit without rings and seals on spool).

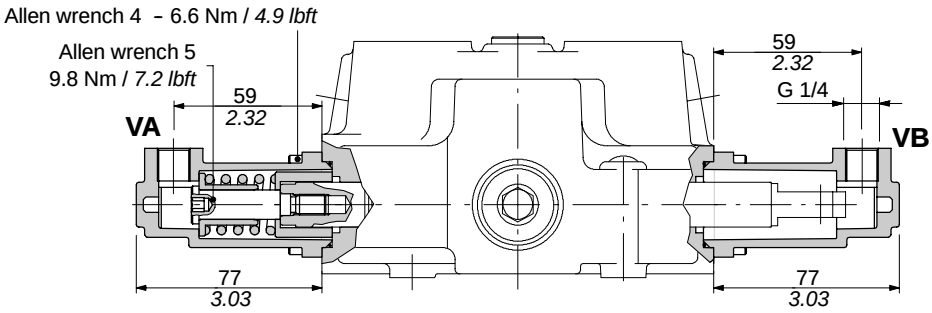

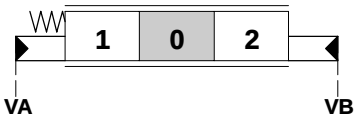

Operating features

Max. pilot pressure . : 50 bar / *730 psi*

Pilot pressure - stroke diagram

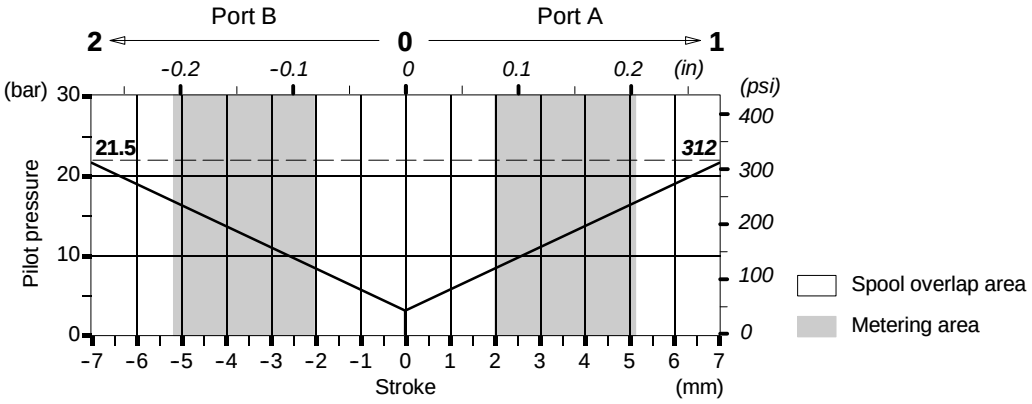

Connection example

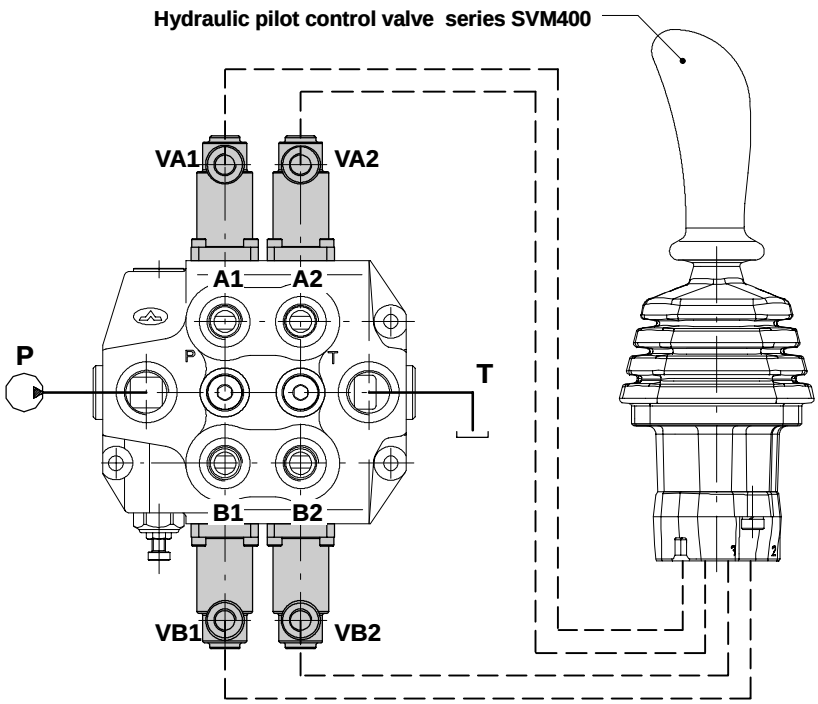

Spool control curve

type **075** with step

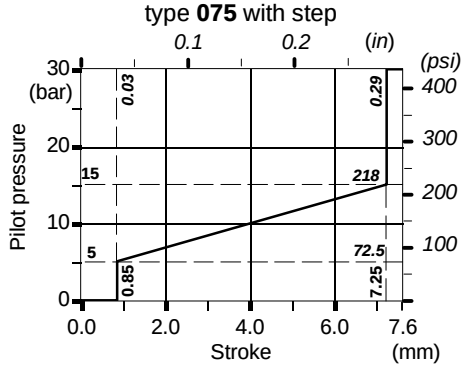

Spool control curve

type **167** without step

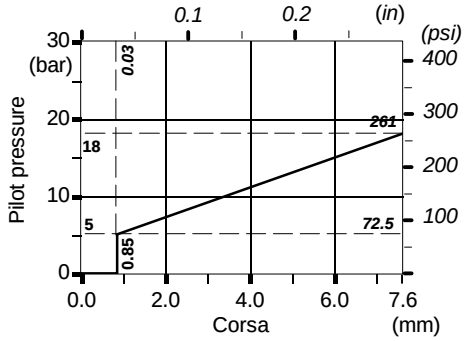

Complete controls

Proportional hydraulic control type 8IMF3

Configuration with spool stroke adjustment; it can be used on **DLM140** valve with standard spools and body (body kit without rings and seals on spool).

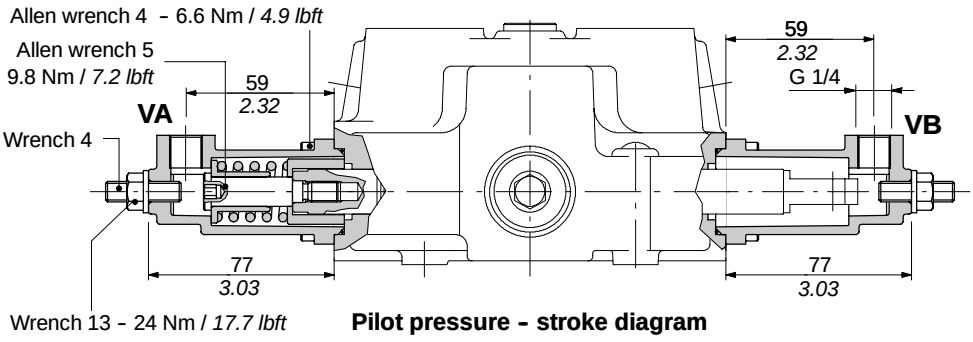

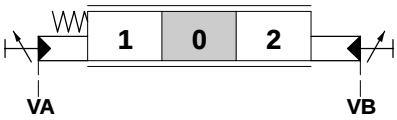

Operating features

Max. pilot pressure . : 50 bar / *730 psi*

Pilot pressure - stroke diagram

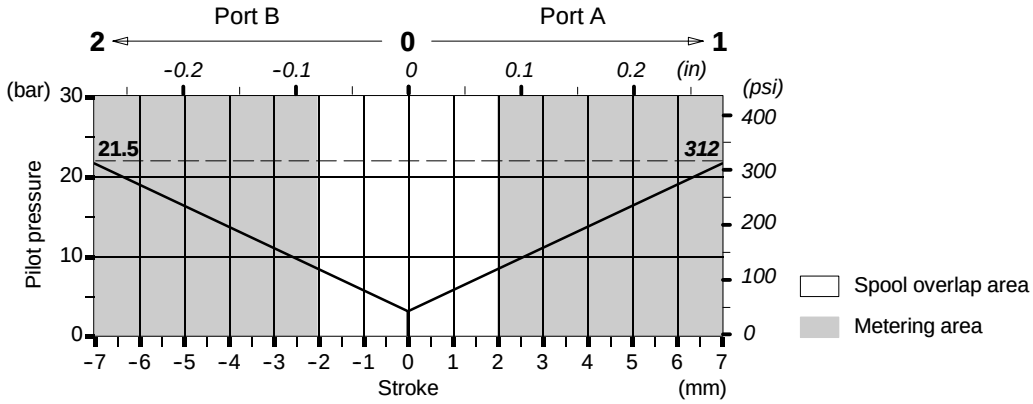

Connection example

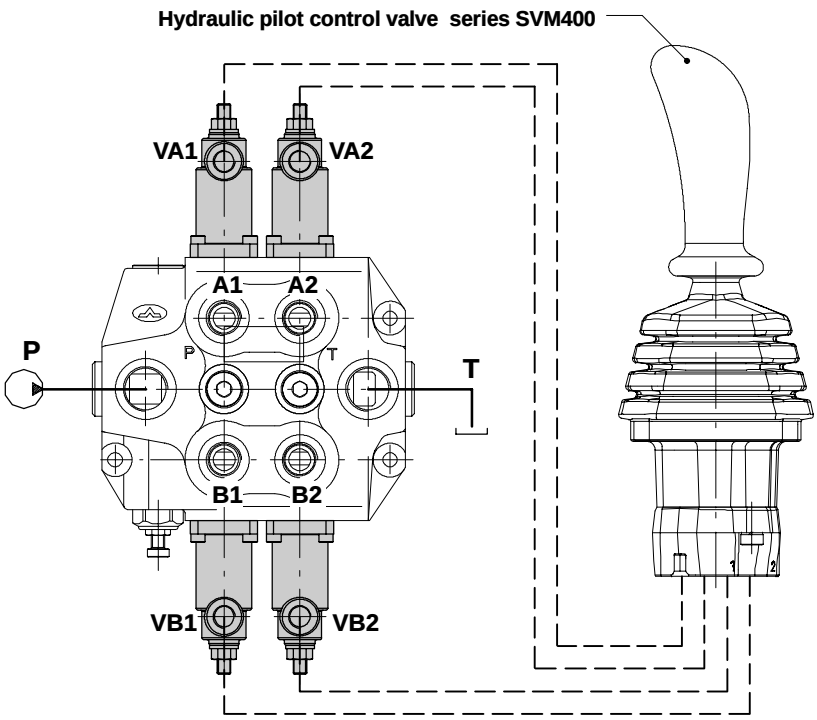

Spool control curve
type **001** with step

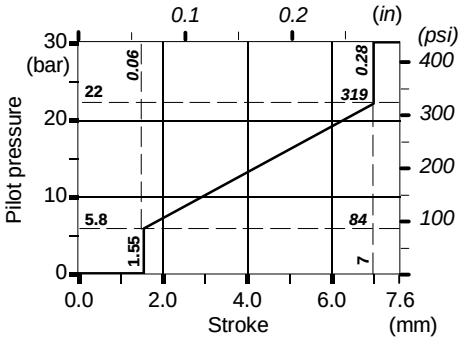

Spool control curve
type **135** without step

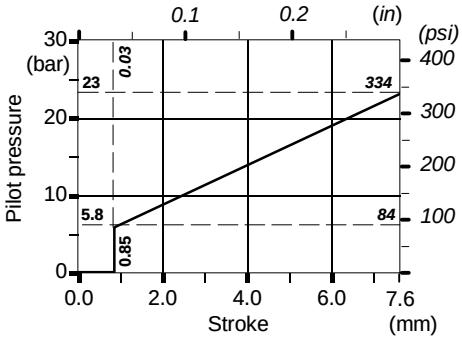

Proportional hydraulic control type 13IM

It needs special body with extra machinering, without rings and seals on spool: available only for spool type **5.**

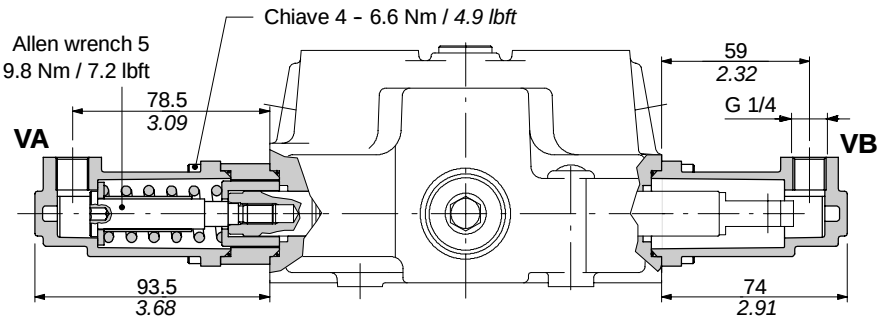

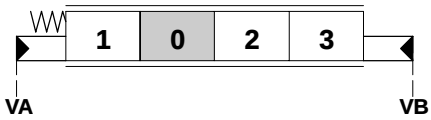

Operating features

Max. pilot pressure . : 50 bar / *730 psi*

Pilot pressure - stroke diagram

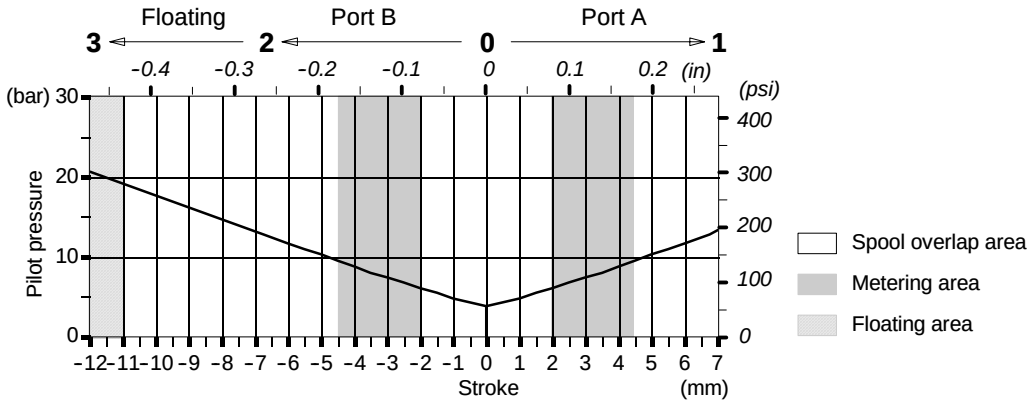

Connection example

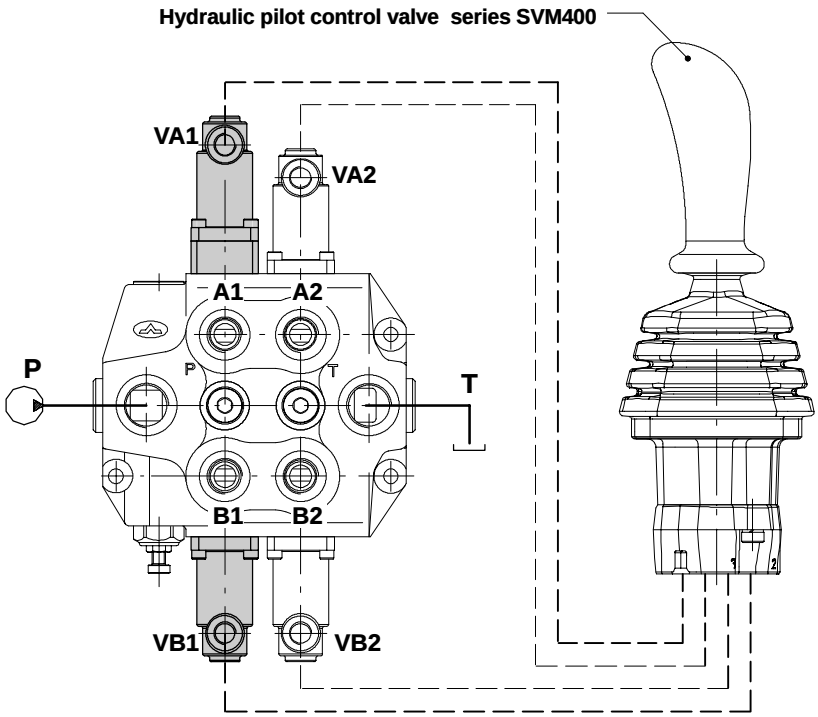

Spool control curve

type **175** without step for port VA1

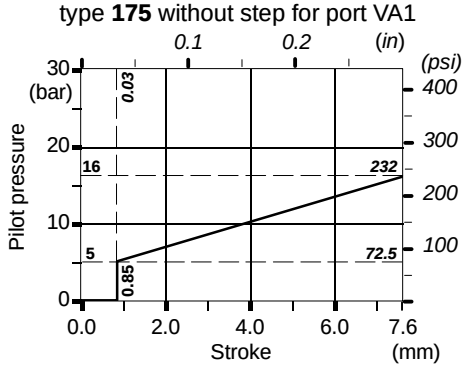

Spool control curve

type **017** with step for port VB1 (floating)

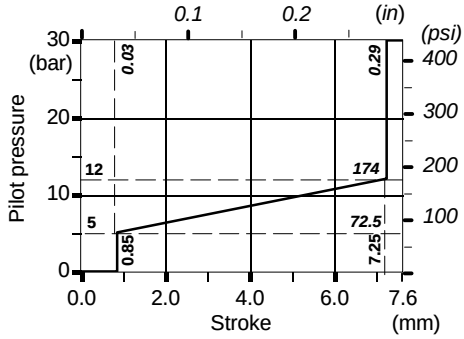

Complete controls

Proportional electrohydraulic control type 8EZ3

With internal or external pilot, it needs of dedicated spool and special body with extra machinering: for information contact Sales Department.

Simplified scheme

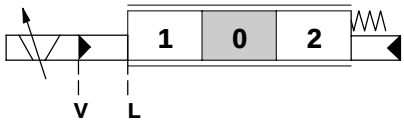

Description example:

SDM140/1-P (YG3-175) L / 1 8EZ35 . P2(G3-100) / PSL - 12VDC

1. 2. 3. 4. 5. 6. 7. 5.

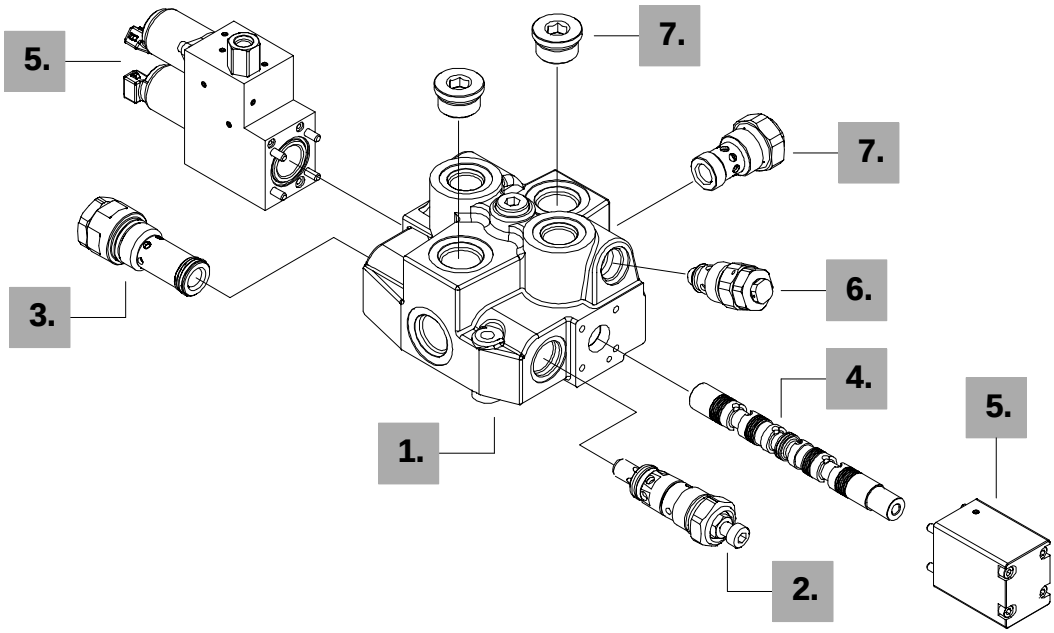

1. Body kit

WARNING bodies need to be pre-arranged and are dedicated exclusively to a specific type of electro-hydraulic control: please contact the Sales Department.

2. Inlet relief options

Direct and pilot pressure relief valve, for types and codes see page 11.

3. Inlet valve options

Unloader valves and blankig plug, for types and codes see page 11.

4. Spool

TYPE	CODE	DESCRIPTION
1(EZ3)	3CU1310440	Double acting, 3 positions, with A and B closed in neutral position

5. Control kit *

TYPE	CODE	DESCRIPTION
8EZ34	5V08108330	Internal pilot and drain with accumulator prearrangement, 12VDC supply voltage
		As previous, 24VDC supply voltage
8EZ35	5V08108334	External pilot and internal drain, 12VDC supply voltage
		As previous, 24VDC supply voltage

6. Valvole sugli utilizzi

Anti-shock and anti-cavitation valves, for types and codes see page 11.

7. Inlet and outlet options*

Upper or side inlet and outlet, carry-over, closed centre (see page 11) and backpressure valve (see page 27).

NOTE (*) - *Items are referred to **BSP** thread.*

Proportional electrohydraulic control type 8EZ3

8EZ34 hydraulic circuit

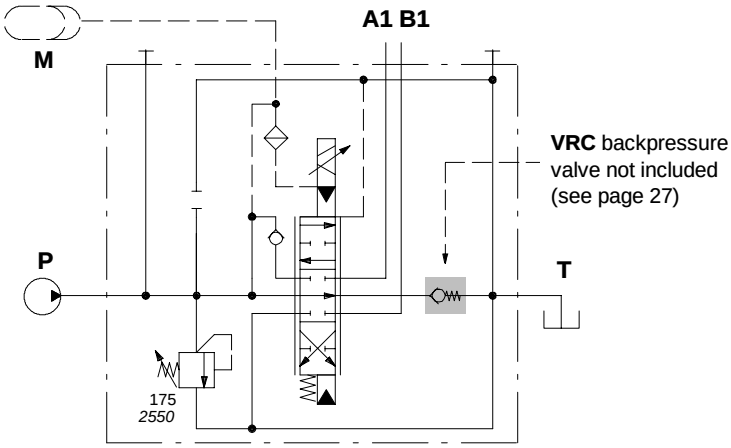

8EZ35 hydraulic circuit

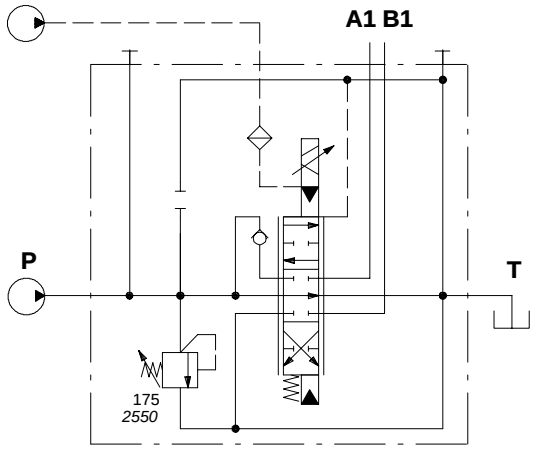

Operating features

SOLENOID VALVES

Flow	: min. 6 l/min
Pressure	: min. 25 bar – *360 psi*
	: max. 315 bar – *4600 psi*
Max. backpressure on T	: 20 bar – *290 psi*
Max. internal leakage	: 3 cm^3/min – *0.18 in^3/min*
Max. hysteresis.	: 0.5 bar – 7.3 psi
Nominal voltage tolerance	: ± 10%
Coil resistance (20 °C)	: 5,3 Ω (12VDC)
	: 24 Ω (24VDC)
Max. current	: 1,5 A (12VDC)
	: 0,63 A (24VDC)
Duty cycle	: 100%
Operating frequency	: 125 Hz
Weather protection	: IP67

Current – port flow diagram

P = 150 bar – *2170 psi* (P→A→B→T)

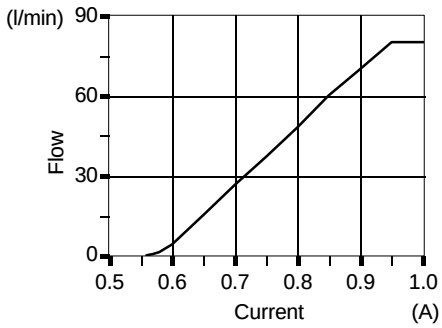

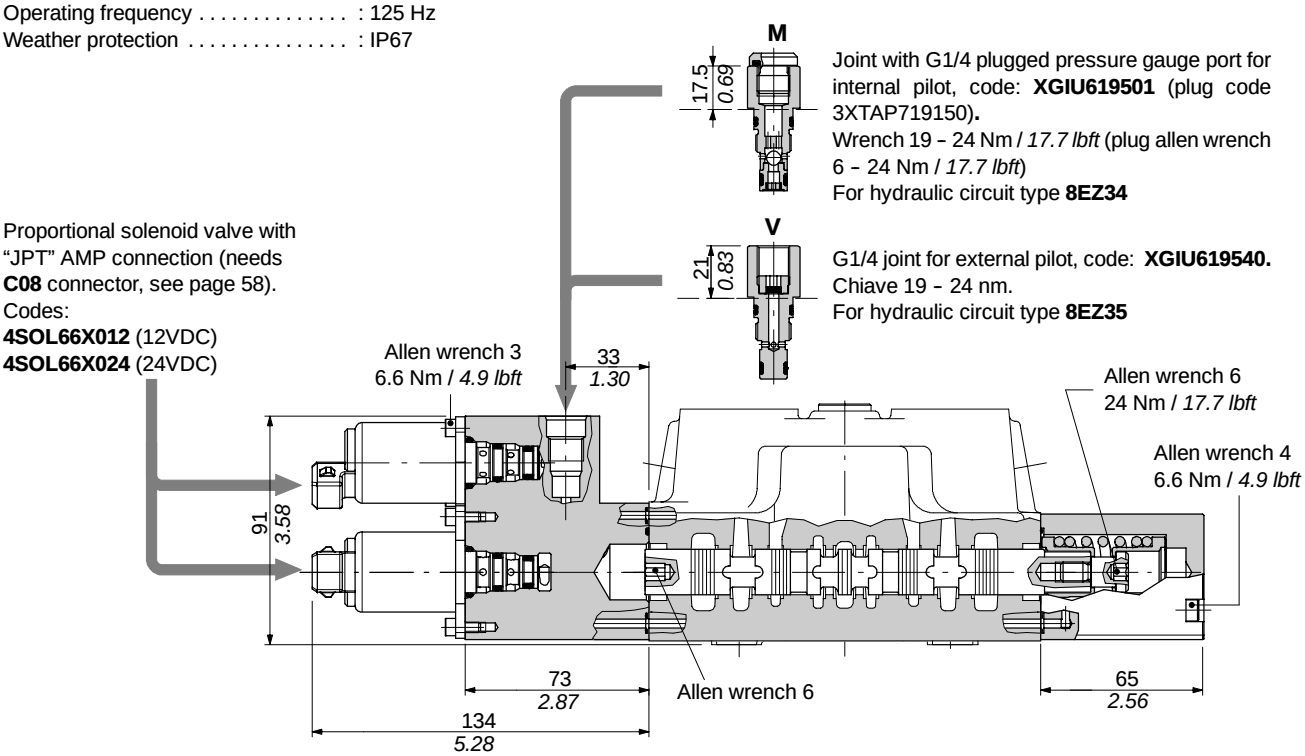

Port valves

Anti-shock valves

P 1 (G 3 - 100)

- 100: Standard setting in bar (for value see page 11)
- 3: Spring type **(3, 4)**.
- G: Adjustment type **(G, H)**.
- P: **1** mounted on port A.
  2 rmounted on port B.
  3 mounted on ports A and B.

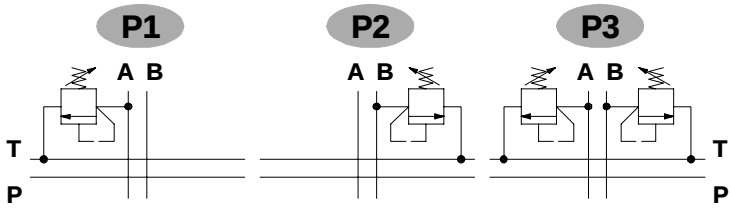

Adjustment type

G: *with screw*

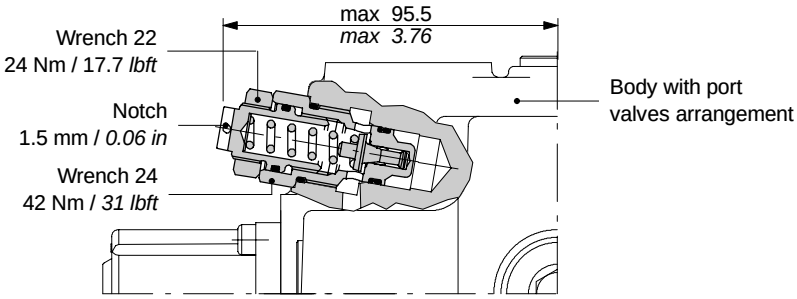

H: *valve set and locked*

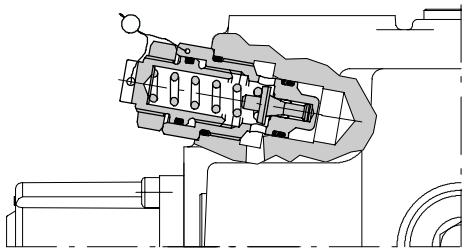

Performance data

Spring nr. 3 (blue band)

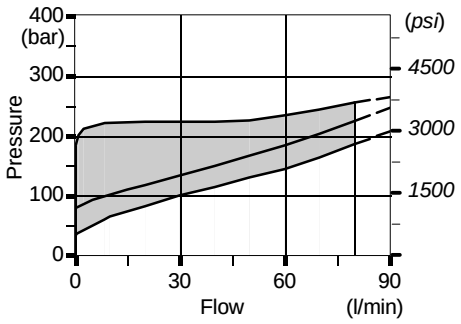

Spring nr.4 (red band)

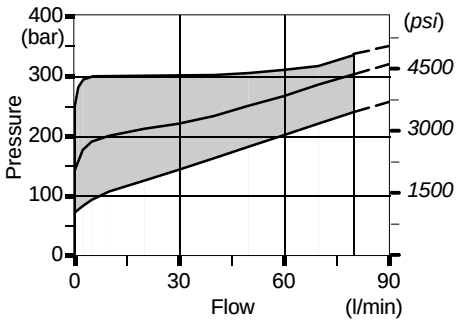

Time response

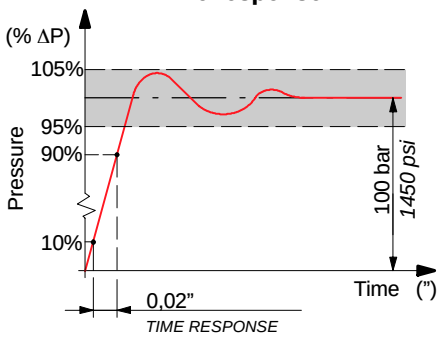

Anti-shock / anti-cavitation valves

U 1 (G 3 - 100)

- 100: Standard setting in bar (for value see page 11)
- 3: Spring type **(2, 3, 4)**.
- G: Adjustment type **(G, H)**.
- 1: **1** mounted on port A.
  2 rmounted on port B.
  3 mounted on ports A and B.

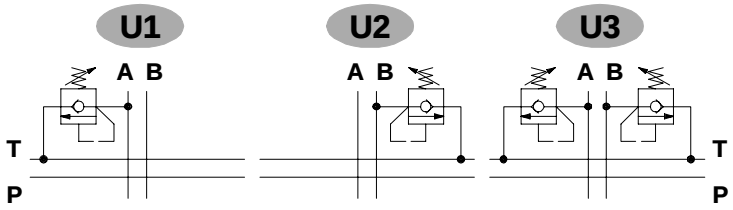

Adjustment type

G: *with screw*

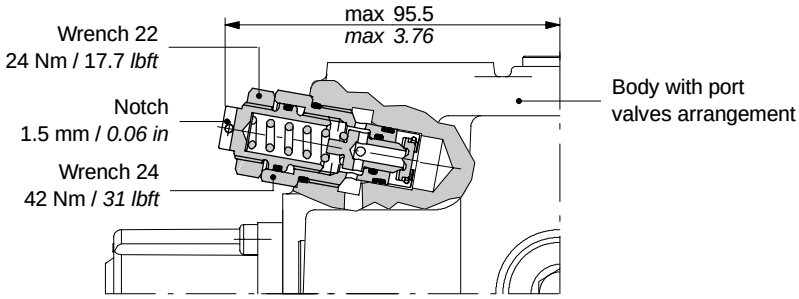

H: *valve set and locked*

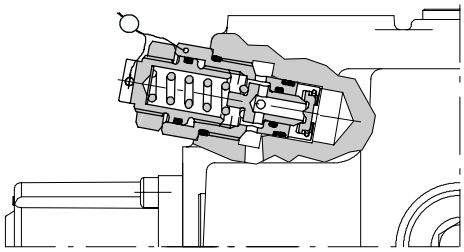

Performance data

Spring nr. 2 (green band)

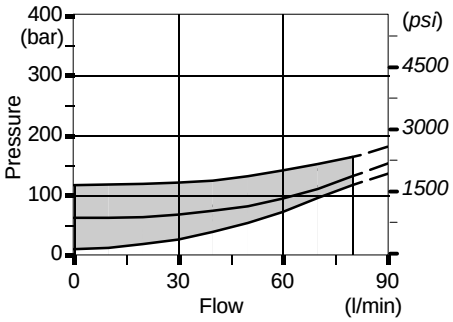

Spring nr. 3 (blue band)

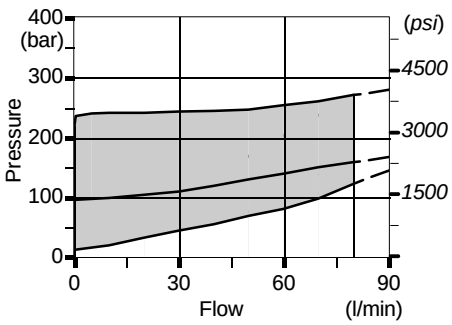

Spring nr. 4 (red band)

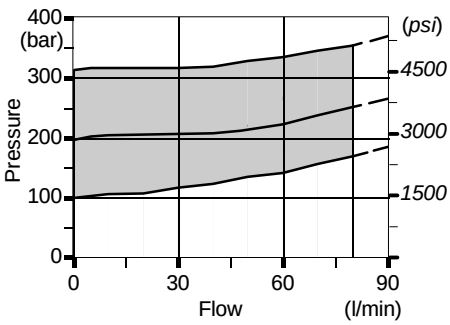

Time response

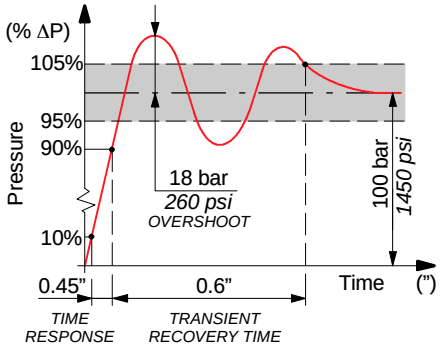

Pressure drop

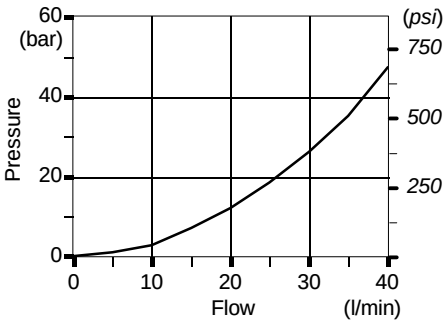

Port valves

Pilot operated anti-shock/anti-cavitation valves: fixed and adjustable setting

UX 1 (Z - 100)

- 100: Standard setting in bar (for value see page 11)
- Z: Fixed setting **(Z)**; Adjustable setting **(G, H)**
- 1: **1** mounted on port A.
- 2: **2** rmounted on port B.
- 3: **3** mounted on ports A and B.

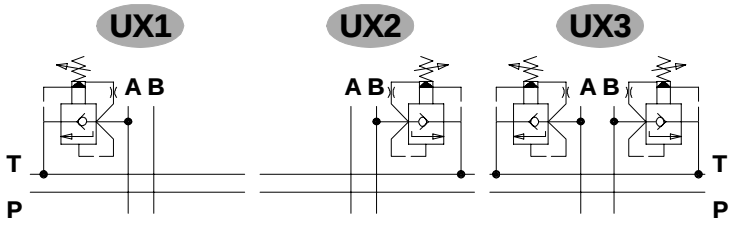

Fixed setting

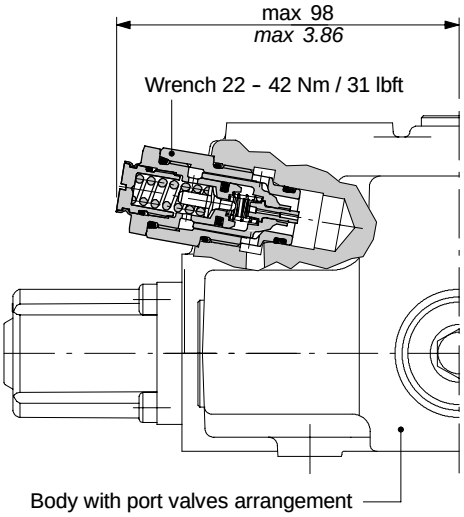

Adjustable setting

E' consigliabile verificare l'ingombro in abbinamento ai comandi lato "A" e "B": consultare il Servizio Commerciale.

G: *with screw*

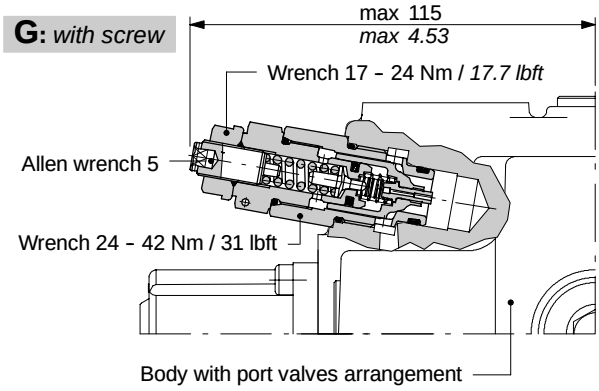

H: *valve set and locked*

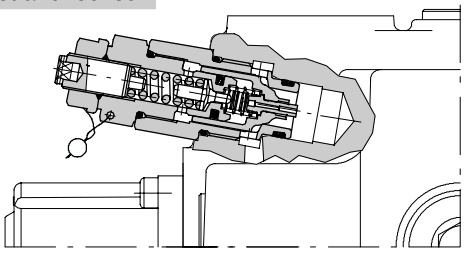

Performance data

Range setting

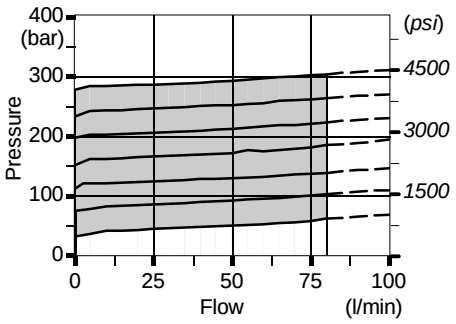

Pressure drop

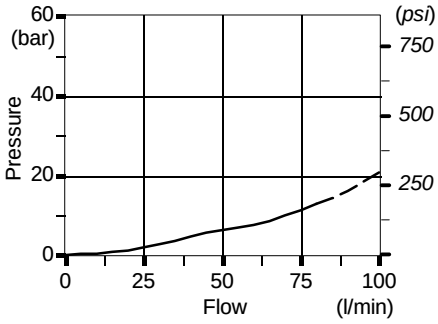

Time response

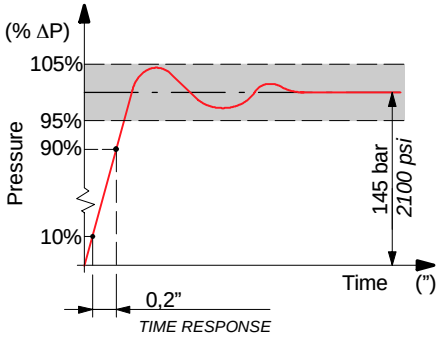

Anti-cavitation valves

C 1

1 mounted on port A.
2 rmounted on port B.
3 mounted on ports A and B.

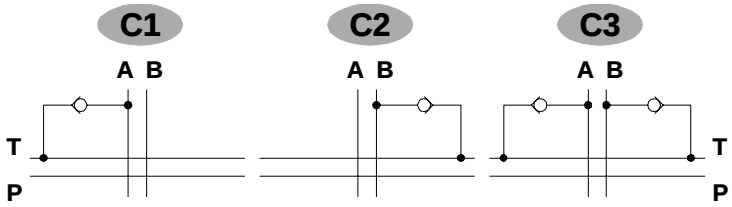

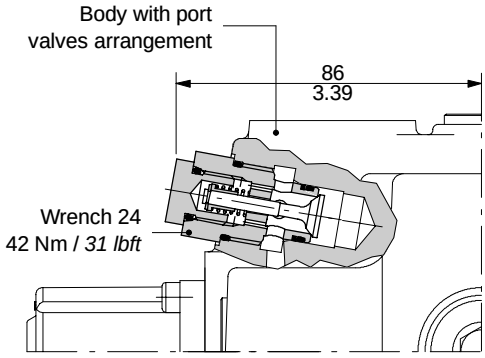

Pressure drop

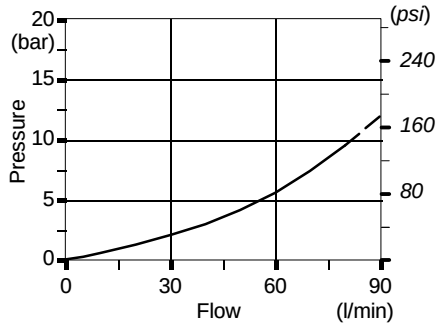

Valve blanking plug with connection to tank

DST 1

1 mounted on port A.
2 rmounted on port B.

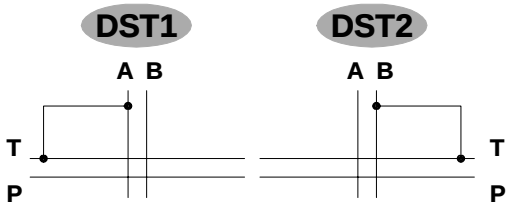

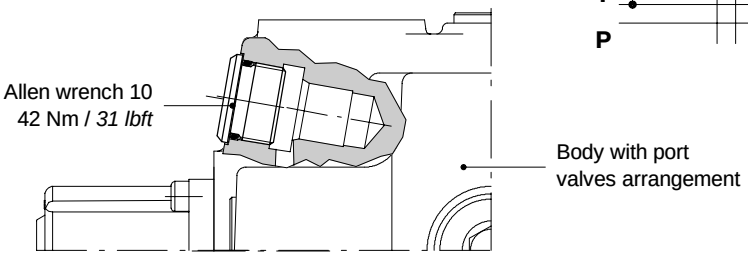

Valve blanking plug

P 1 T

1 mounted on port A.
2 rmounted on port B.
3 mounted on ports A and B.

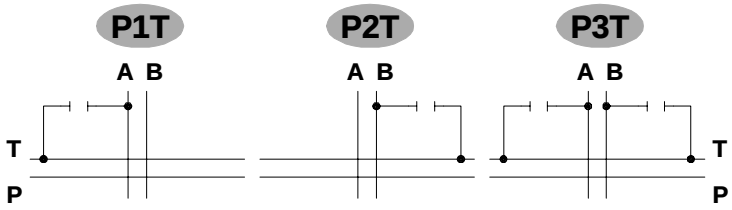

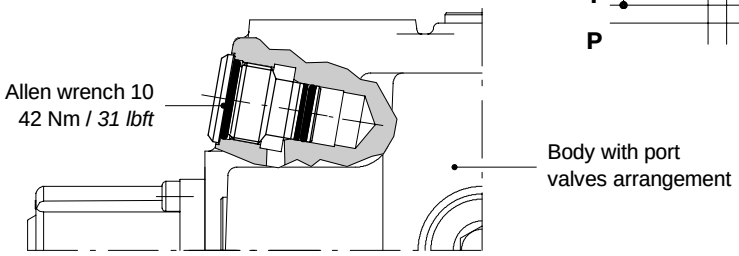

Inlet and outlet options

PSA: upper ports (standard)

See page 9.

PSL: side ports

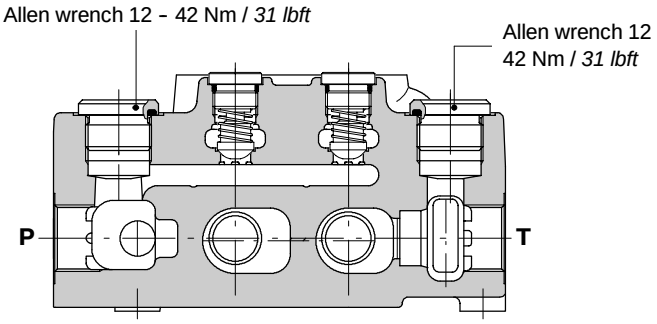

Description example:
SDM140/2-P(YG3-175)/18L/18L/**PSL**

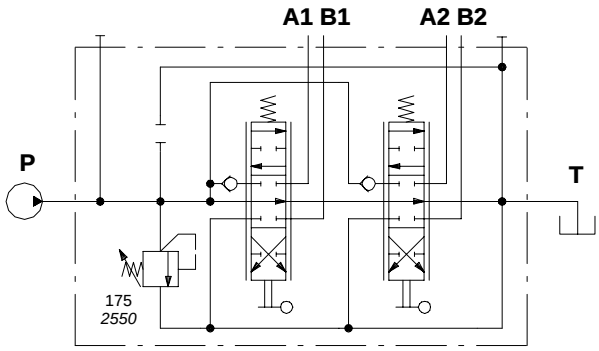

AE: with carry-over

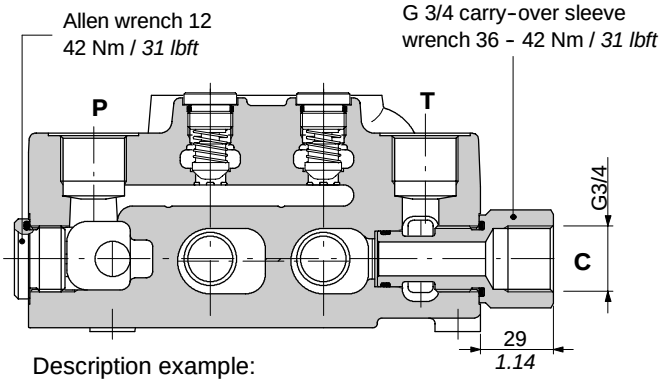

Description example:
SDM140/2-P(YG3-175)/18L/18L/**AE**

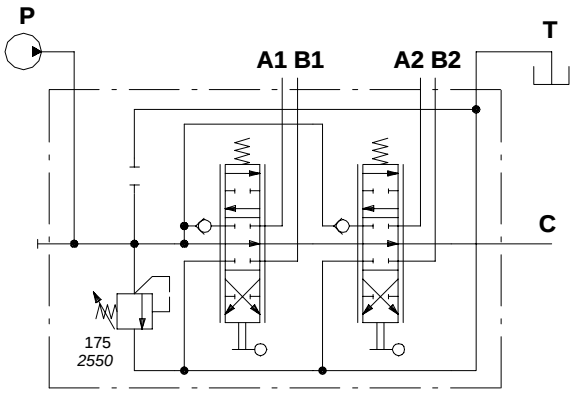

AEK: closed centre

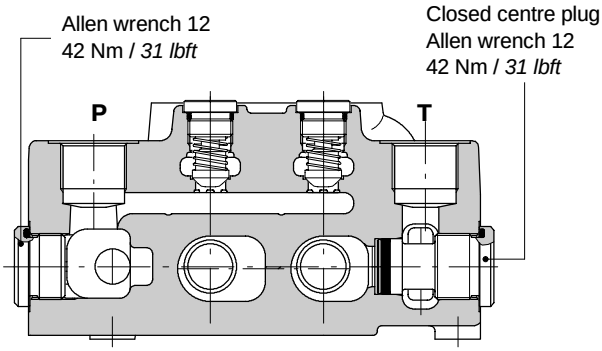

Description example:
SDM140/2-P(YG3-175)/18L/18L/**AEK**

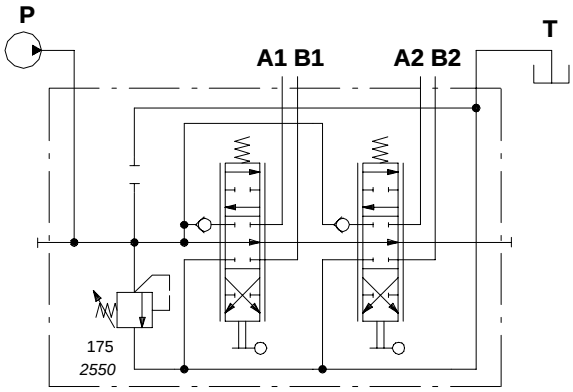

Contents

DLM140 directional control valve

Dimensional data

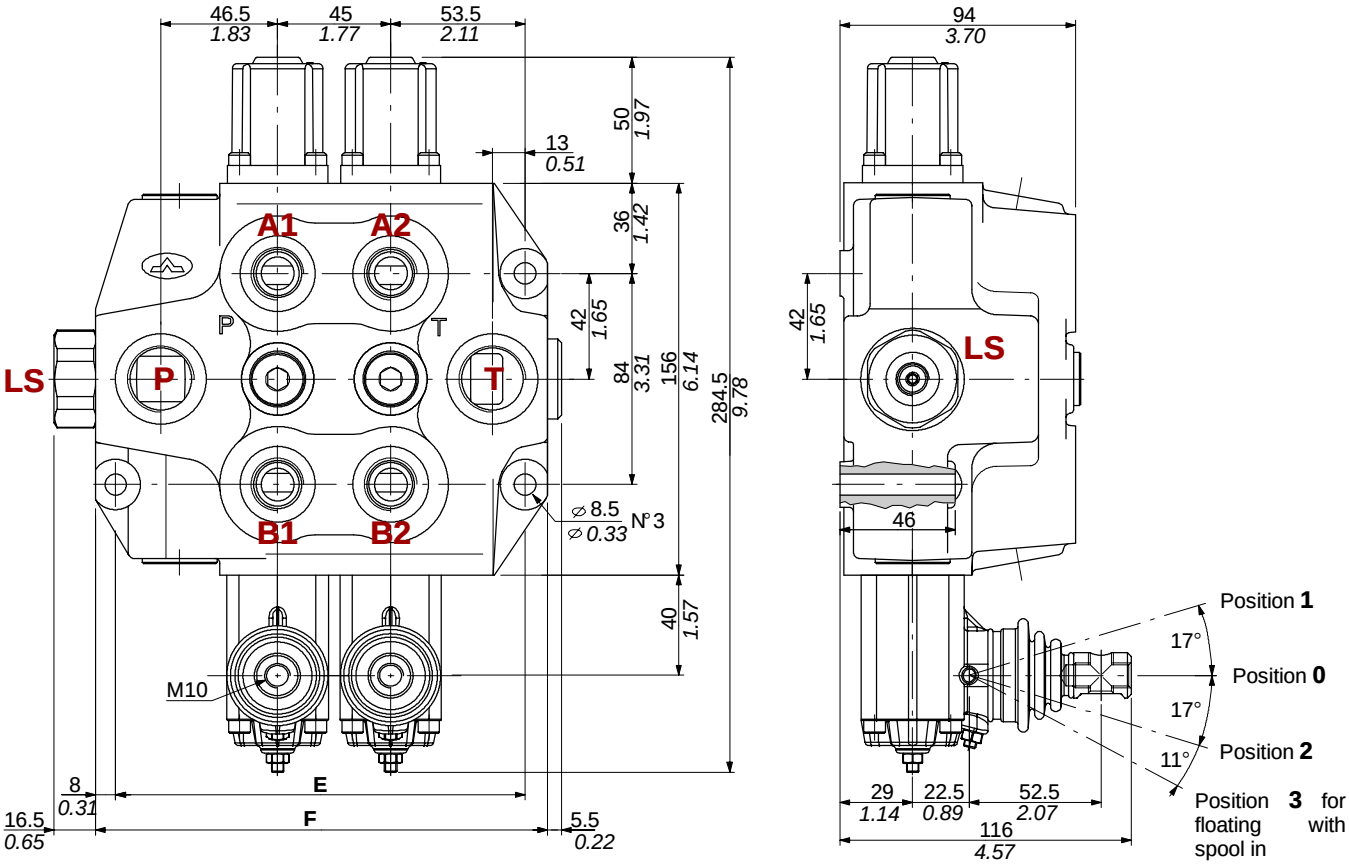

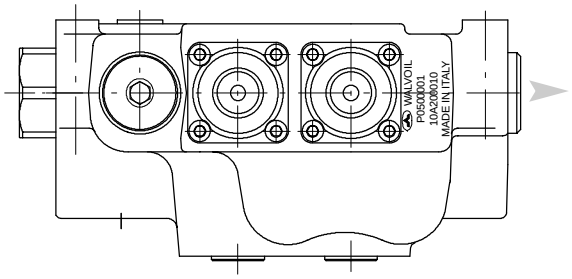

WALVOIL
P0200001
103020006
MADE IN ITALY

Production batch :
P05 = production year (2005)
00001 = progressive number

Code

TYPE	E		F		Weight	
	mm	*in*	mm	*in*	kg	*lb*
DLM140/1-P	118	*4.65*	157	*6.18*	9.8	*21.6*
DLM140/2-P	163	*6.42*	202	*7.95*	13.7	*30.2*
DLM140/3-P	208	*8.19*	247	*9.72*	17.6	*38.8*

TYPE	E		F		Weight	
	mm	*in*	mm	*in*	kg	*lb*
DLM140/4-P	253	*9.96*	292	*11.50*	21.5	*47.4*
DLM140/5-P	298	*11.73*	337	*13.27*	25.4	*56*
DLM140/6-P	343	*13.50*	382	*15.04*	29.3	*64.6*

Hydraulic circuit

Standard configuration with top inlet and outlet ports (**PSA** execution).

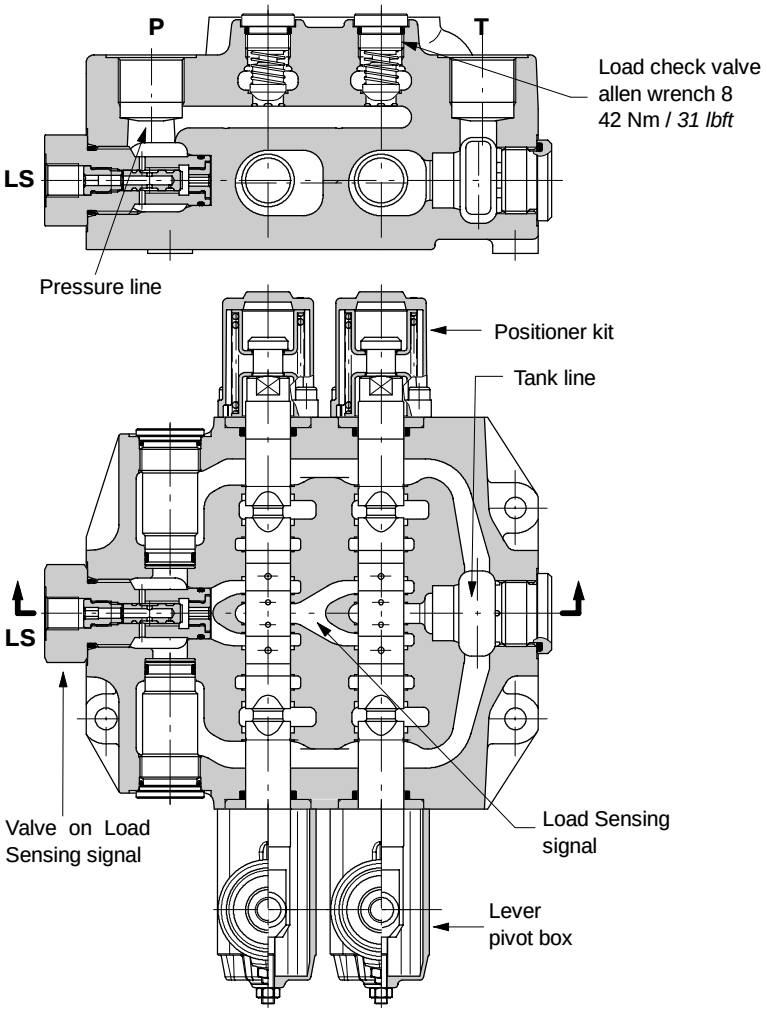

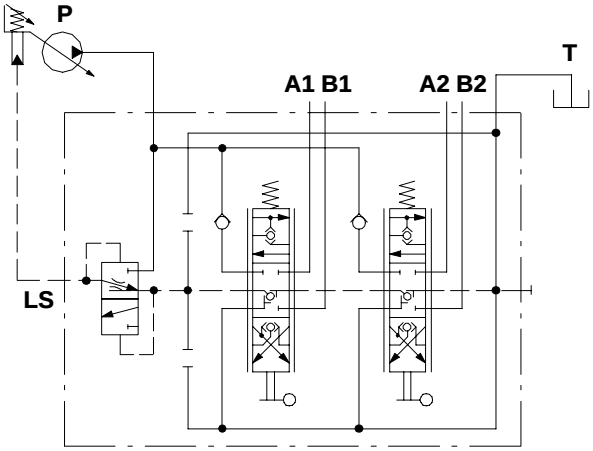

Description example:
DLM140/2-AP/1N8LF3/1N8LF3/**PSA**

Right inlet

Simmetrical body allows the reverse assembly of spools and relative kits (execution **ED**).

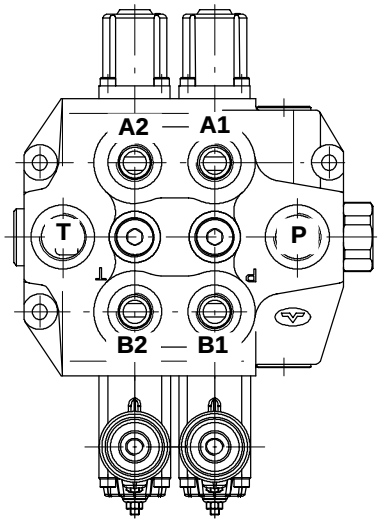

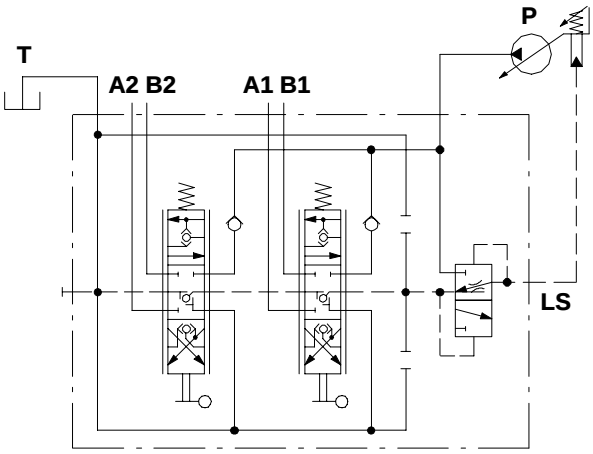

Description example:
DLM140/2-AP/**ED**-1N8LF3/**ED**-1N8LF3/PSA

Ordering codes

Description example:

1st sectione — following section

DLM140 / 2 - AP / 1N 8 LF3 / 1N 8IMF3 . P2(G3 - 100) / PSA *

1. 2. 3. 4. 5. 6. 7. 8.

Port valves setting (bar)

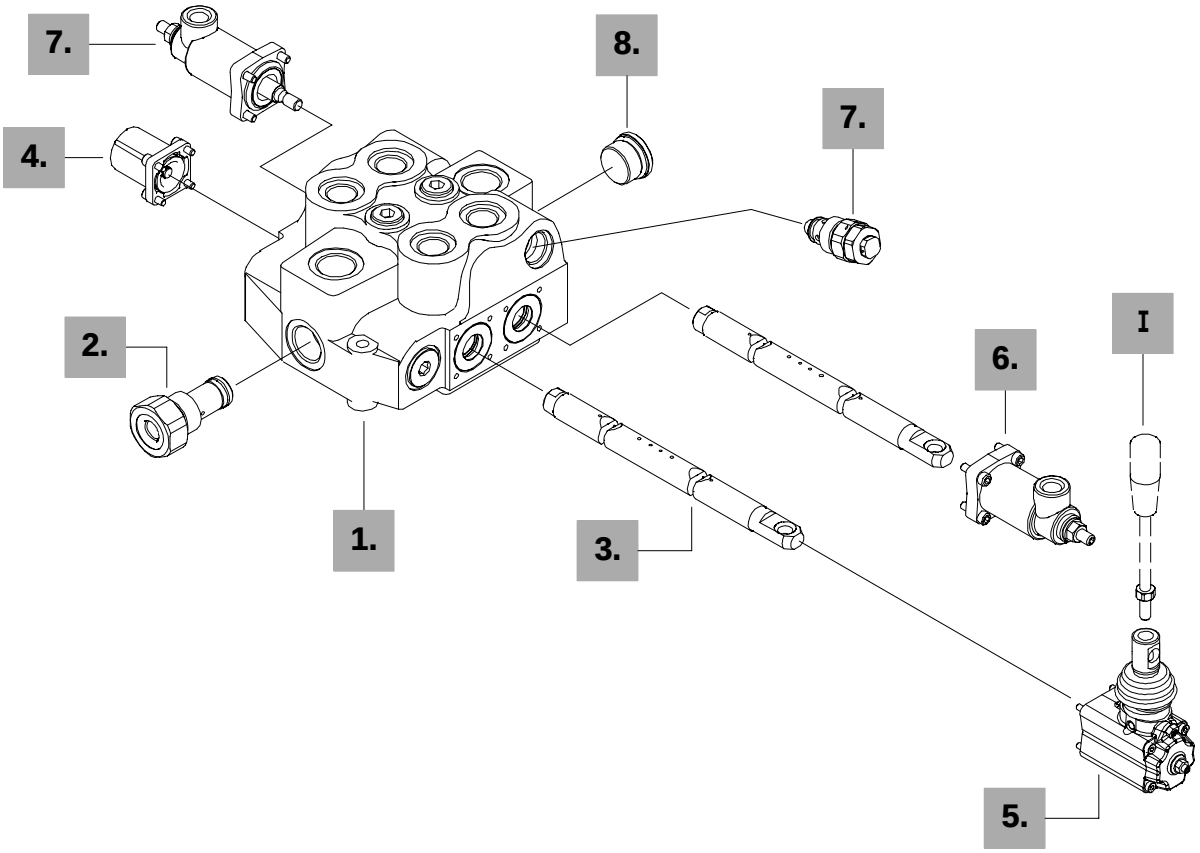

1. Body kit *

TYPE	CODE	DESCRIPTION
Without service port valves prearrangement		
DLM140/1	5KC1973002	1 section
DLM140/2	5KC1963005	2 sections
DLM140/3	5KC1923019	3 sections
DLM140/4	5KC1933017	4 sections
DLM140/5	5KC1943012	5 sections
DLM140/6	5KC1953007	6 sections

Include body, seals, rings and load check valves.

2. Valve on LS signal *

TYPE	CODE	DESCRIPTION
AP	XCOR236671	With G1/4 port

NOTE (*****) - *Items are referred to **BSP** thread.*

3. Spool *page 52*

TYPE	CODE					DESCRIPTION
	20 l/min	40 l/min	60 l/min	85 l/min	110 l/min	Nominal flow with pump stand-by = 20 bar / *290 psi*
	V	**Q**	**S**	**N**	**P**	
1	3CU1311020	3CU1311040	3CU1311060	3CU1310600	3CU1311110	Double acting, 3 position, with A and B closed in neutral position
Special spools for particular positioner kits . . . . . page 53						
5	3CU1341020	3CU1341040	3CU1341060	3CU1340600	3CU1341110	Double acting, 4 positions, floating circuit in 4th position with spool in

4. "A" side spool positioners *page 21*

TYPE	CODE	DESCRIPTION
8	5V08108010	With spring return in neutral position
8D	5V08108202	As type 8 and pin with M8 female thread for dual control
8D1	5V08108210	As type 8 and pin with ∅ 8mm (*0.32in*) radial hole
9B	5V09108040	With detent in position 1 and spring return in neutral position
10B	5V10108040	With detent in position 2 and spring return in neutral position
11B	5V11108040	With detent in position 1 and 2, spring return in neutral position
8K	5V08708112	With spring return in neutral position and 12 VDC spool solenoid lock device
	5V08708124	As previous 24 VDC
8MG3(NO)	5V08108050	With spring return in neutral position and microswitch in positions 1 and 2
8ED3	5V08108360	ON/OFF 12 VDC elettro-hydraulic kit
	5V08108361	ON/OFF 24 VDC elettro-hydraulic kit
8PG	5V08108708	Proportional pneumatic control
8EPG3	5V08108737	ON/OFF 12 VDC electro-pneumatic kit
	5V08108742	ON/OFF 24 VDC electro-pneumatic kit
Particular positioner kits for special spools *page30*		
13	5V13108040	4 pos. with spring return in neutral pos. and detent in 4th pos.**: for spool 5**
13MG3F(NO)	5V13108051	As type 13 with microswitch in positions 1 and 2**: for spool 5**
13K	5V13708113	As type 13 with 12 VDC spool solenoid lock device: **for spool 5**
	5V13708124.	As previous 24 VDC

5. "B" side options *page 33*

TYPE	CODE	DESCRIPTION
LF3	5LEV108710	Lever box with spool stroke adjusting
SLP	5COP108000	Witout lever box, with dust-proof plate
SLCY	5COP208060	Witout lever box, with endcap
TQ	5TEL108110	Flexible cable connection
LCB	5CLO308100	Joystick lever for 2 sections operation

I Optional handlevers

TYPE	CODE	DESCRIPTION
AL01/M10x200	170012020	For L lever box L= 200 mm/*7.87in*
AL08/M12x200	170013120	For LB lever or LCB joystick L=200mm/7.87*in*

8. Inlet and outlet options* *page 54*

TYPE	CODE	DESCRIPTION
PSA	3XTAP732200	G3/4 plug; nr.1 for upper inlet and outlet.
PASL	3XTAP732200	G3/4 plug; nr.1 for upper inlet and side outlet.

6. Complete controls * *page 37*

TYPE	CODE	DESCRIPTION
8IMF3	5IDR208220	Proportiona hydraulioc control with spool stroke limiter

7. Port valves *page 42*

Need special body kit

Standard setting is referred to 10 l/min flow.

TYPE	CODE	DESCRIPTION
PT	3XTAP524290	Valve blanking plug
DST	3XTAP624180	Valve blanking plug with connection to tank
Anti-shock valve		
P(G3-100)	3XCAR208113	From 100 to 250 bar / *1450 to 3600 psi*: standard setting 100 bar / *1450 psi*
P(G4-200)	3XCAR208114	From 200 to 315 bar / *2900 to 4600 psi*: Standard setting 200 bar / *2900 psi*
Anti-shock/anti-cavitation valve		
U(G2-63)	XCAR308112	From 63 to 125 bar / *900 to 1800 psi*: Standard setting 63 bar / 900 psi
U(G3-100)	XCAR308115	From 100 to 250 bar / *1450 to 3600 psi*: Standard setting 100 bar / *1450 psi*
U(G4-200)	XCAR308114	From 200 to 315 bar / *2900 to 4600 psi*: Standard setting 200 bar / *2900 psi*
Pilot operated anti-shock/anti-cavitation valve: **fixed setting**		
UX(Z-63)	X005410063	Setting 63 bar / 900 psi
UX(Z-80)	X005410080	Setting 80 bar / 1150 psi
UX(Z-100)	X005410100	Setting 100 bar / 1450 psi
UX(Z-125)	X005410125	Setting 125 bar / 1800 psi
UX(Z-160)	X005410160	Setting 160 bar / 2320 psi
UX(Z-200)	X005410200	Setting 200 bar / 2900 psi
UX(Z-250)	X005410250	Setting 250 bar / 3600 psi
UX(Z-315)	X005410315	Setting 315 bar / 4600 psi
Pilot operated anti-shock/anti-cavitation valve: **adjustable setting**		
UX(G-145)	X143411145	From 100 to 280 bar / *1450 to 4050 psi*: Standard setting
Anti-cavitation valve		
C	XCAR408110	Anti-cavitation valve

Spool

Type 1

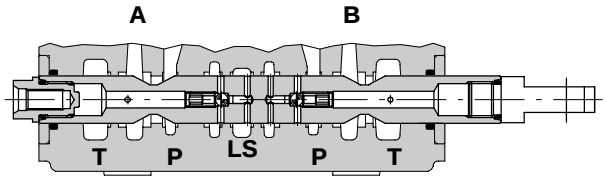

P → A B → T

▶ stroke:
+ 7 mm / *0.28 in*

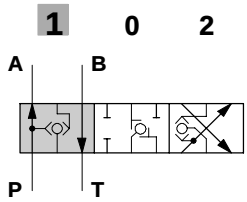

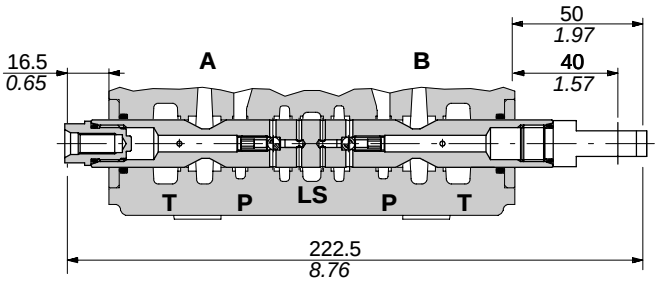

P-A-B-T closed

◀ ▶

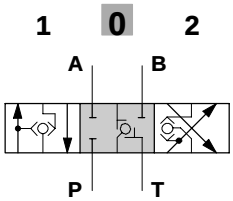

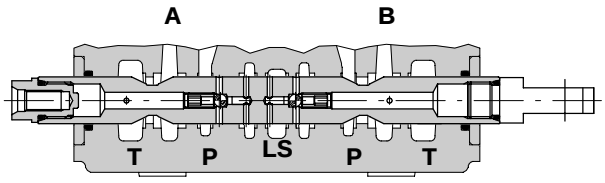

P→ B A → T

◀ stroke:
- 7 mm / *0.28 in*

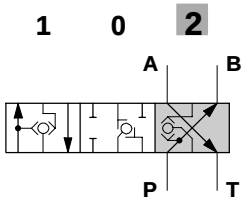

Performance data

Load Sensing pump stand-by = 20 bar / *290 psi*

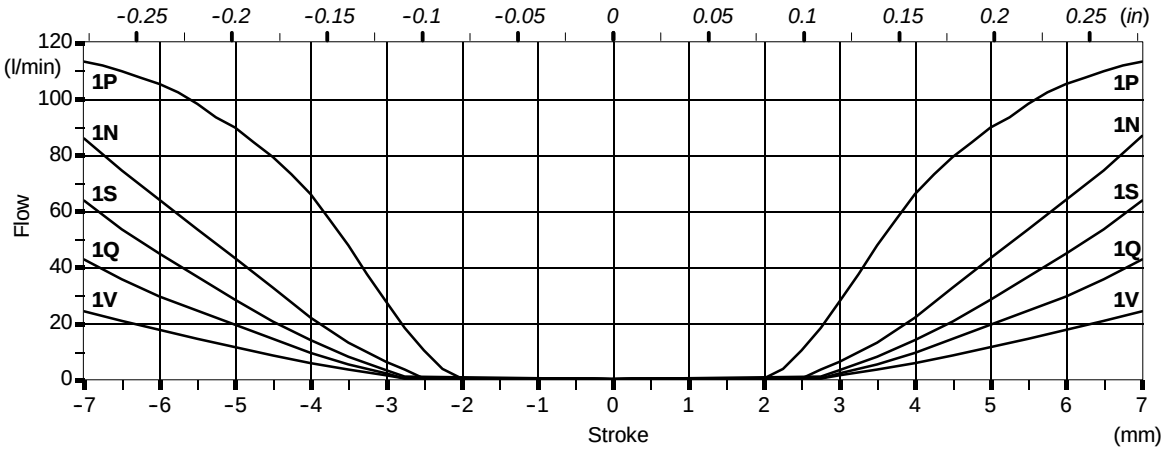

Spools

Type 5

This spool must be used only with spool positioner type **13**, **13MGF**, **13K** (see page 30).

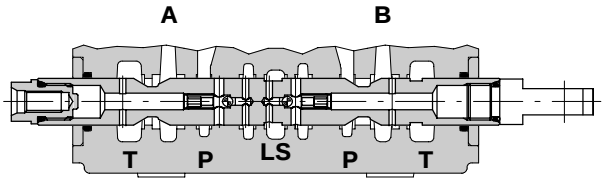

P → A B → T

▶
stroke:
+ 7 mm / *0.28 in*

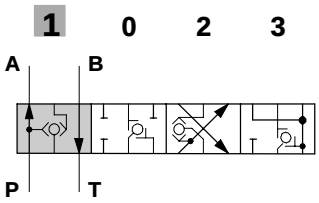

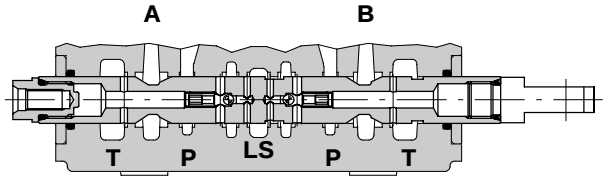

P-A-B-T closed

◁ ▷

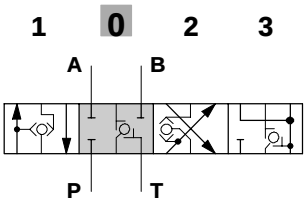

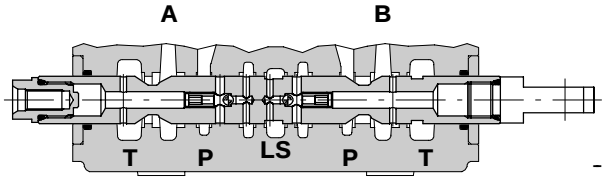

P→ B A → T

◀
stroke:
- 6.7 mm / *0.26 in*

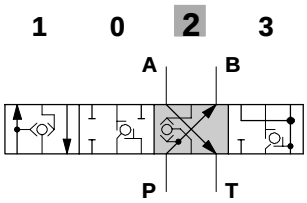

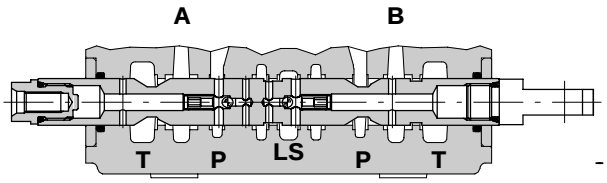

A(B) → T (floating)

◀◀
stroke:
- 12 mm / *0.47 in*

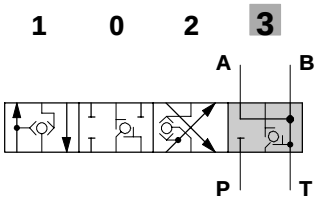

Inlet and outlet options

PSA: upper ports (standard)

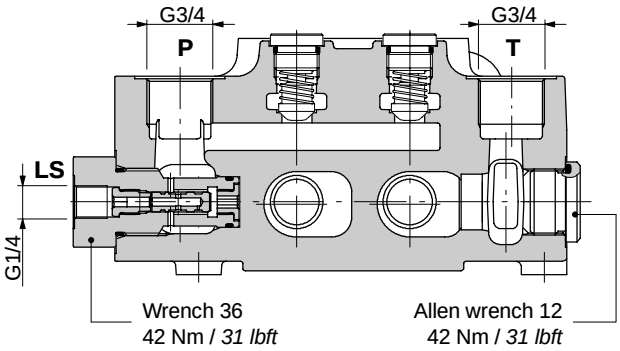

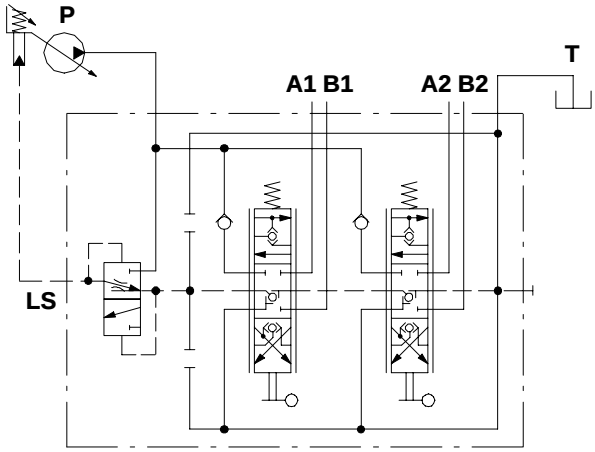

Description example:
DLM140/2-AP/1N8LF3/1N8LF3/**PSA**

PASL: upper inlet and side outlet

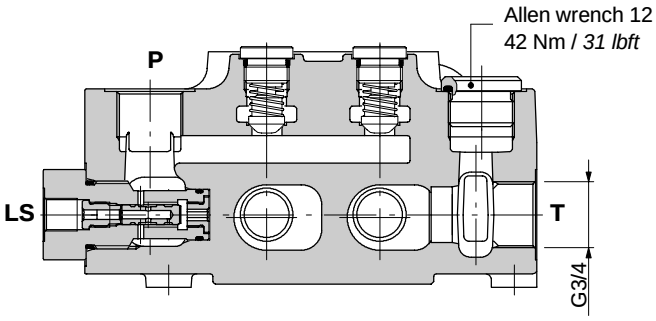

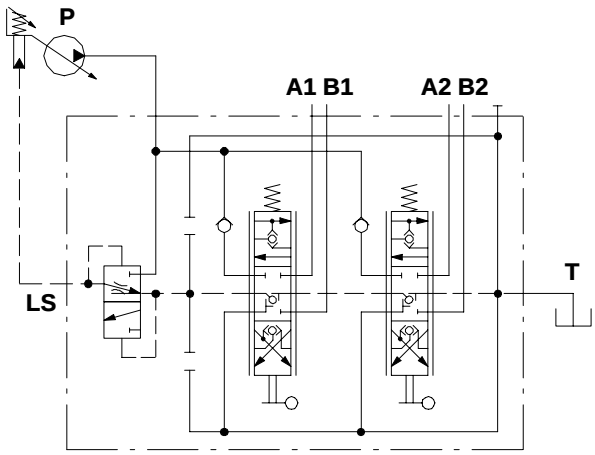

Description example:
DLM140/2-AP/1N8LF3/1N8LF3/**PASL**

Installation and maintenance

The SDM140 and DLM140 valves are assembled and tested as per the technical specification of this catalogue.
Before the final installation on your equipment, follow the below recommendations:

- the valves can be assembled in any position, in order to prevent body deformation and spool sticking mount the product on a flat surface;
- in order to prevent the possibility of water entering the lever box and spool control kit, do not use high pressure wash down directly on the valve;
- prior to painting, ensure plastic port plugs are tightly in place.

SDM140

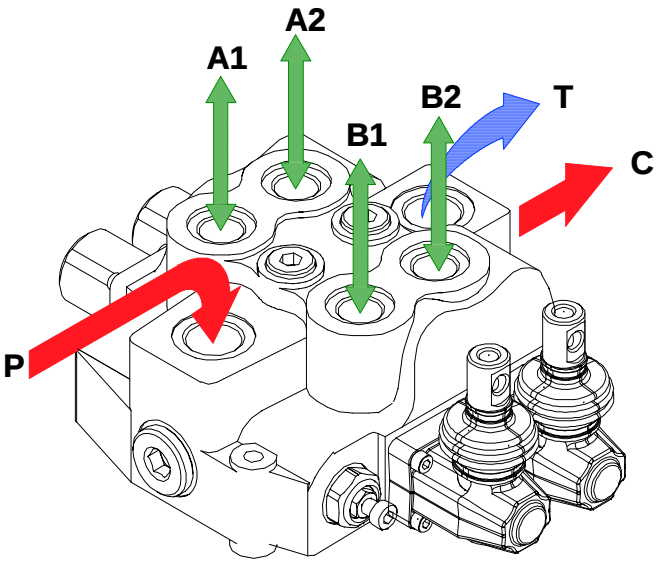

Carry-over configuration

DLM140

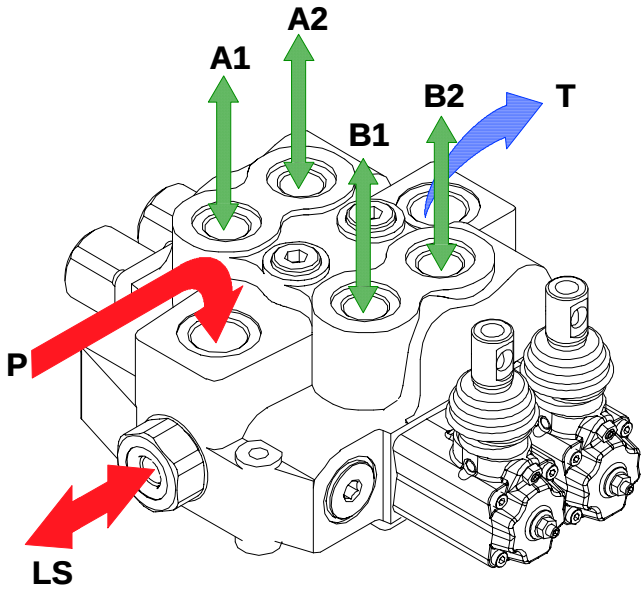

Fitting tightening torque - Nm / *lbft*

THREADS TYPE	P and C ports	A and B ports	T port	L.S. signal
BSP	G 3/4	G 1/2	G 3/4	G 1/4
With O-Ring seal	70 / *51.6*	50 / *36.9*	70 / *51.6*	20 / *14.8*
With copper washer	70 / *51.6*	60 / *44.3*	70 / *51.6*	25 / *18.4*
With steel and rubber washer	70 / *51.6*	60 / *44.3*	70 / *51.6*	16 / *11.8*
UN-UNF	1 1/16-12 (SAE 12)	7/8-14 (SAE 10)	1 1/16-12 (SAE 12)	9/16-18 (SAE 6)
With O-Ring seal	95 / *70.1*	60 / *44.2*	95 / *70.1*	30 / *22.1*
MET	M 27x2	M 22x1,5	M 27x2	M 14x1,5
With O-Ring seal	100 / *73.8*	60 / *44.2*	100 / *73.8*	35 / *25.8*

NOTE - *These torque are recommended. Assembly tightening torque depends on many factors, including lubrication, coating and surface finish. The manufacturer shall be consulted.*

Installation and maintenance

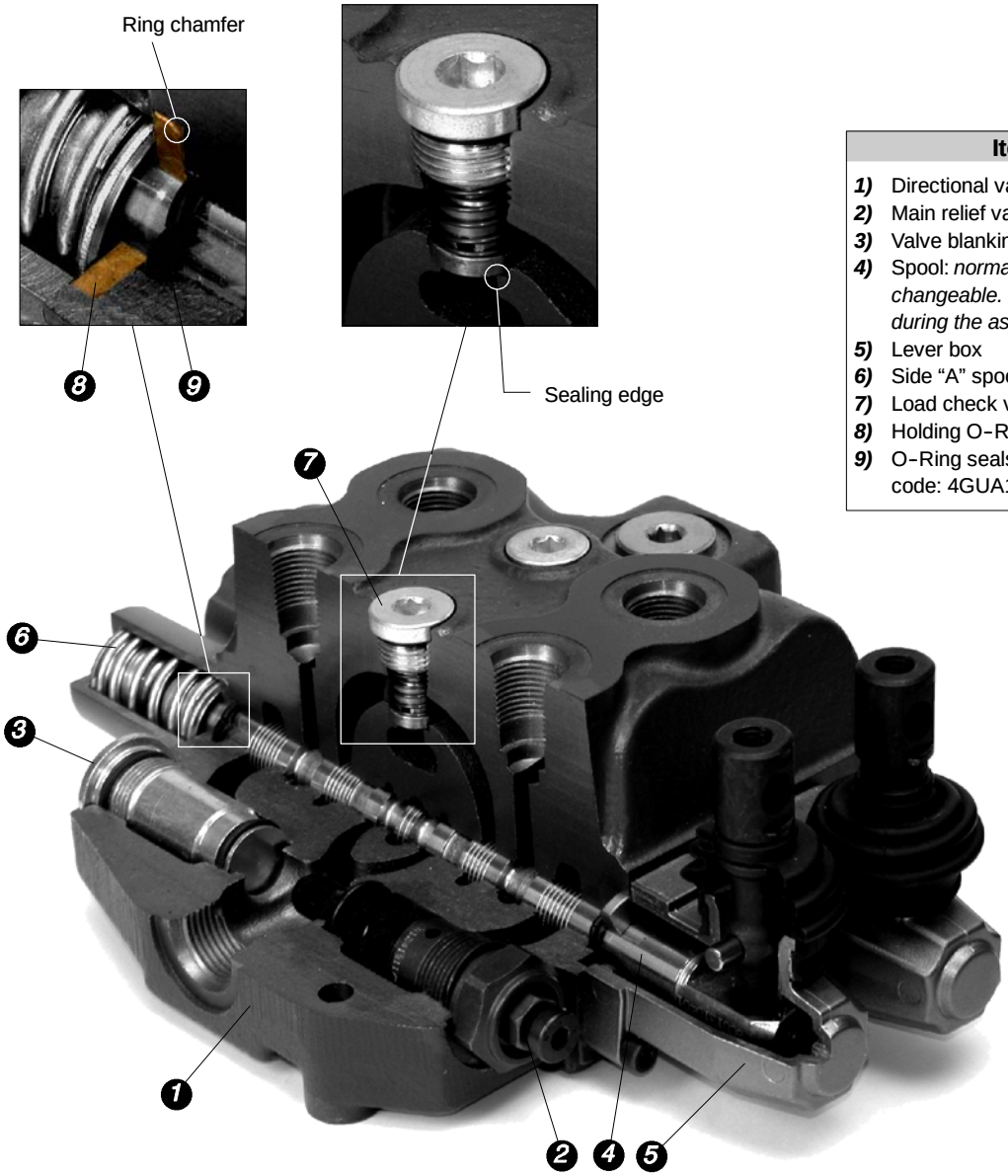

Item list

1) Directional valve body
2) Main relief valve
3) Valve blanking plug
4) Spool: *normally the spools are interchangeable. Verify the smoothness during the assembly*
5) Lever box
6) Side "A" spool positioner
7) Load check valve
8) Holding O-Ring bushing
9) O-Ring seals 18x2.5 code: 4GUA118025

NOTE – *All articulated parts inside cap, lever box and mechanical joystick are lubricated with synthetic base grease grade NLGI2*

Malfunction	Cause	Remedy
External leakage pivot box lever or control kit side.	Worn spool seal due to mechanical actuation or high back pressure.	Locate the leakage and replace the seal. Check back pressure level.
Excessive internal leakage on A and B ports.	Increase clearance between spools and body due to high wear.	Replace the directional control valve and check the oil contamination level.
Dropping load during transition while raising.	High leakage on the load check valve.	Remove the load check valve and clean the seat.
Inability to build pressure on A and B ports.	Pressure relief valve blocked open.	Remove and clean or replace the valve.
	Low pump pressure and flow.	Check the pump and circuit.

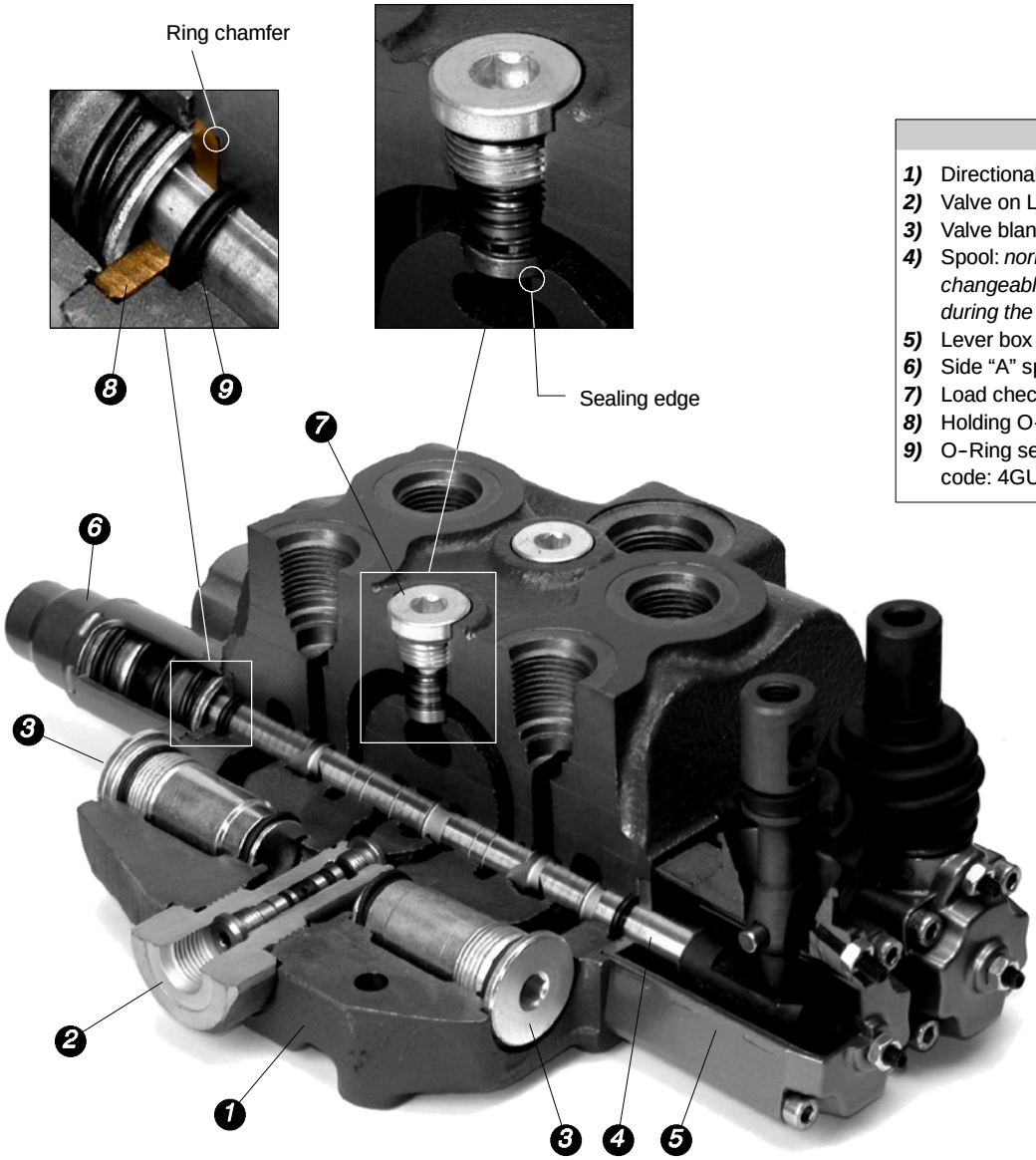

Item list

1) Directional valve body
2) Valve on Load Sensing signal
3) Valve blanking plug
4) Spool: *normally the spools are inter-changeable. Verify the smoothness during the assembly*
5) Lever box
6) Side "A" spool positioner
7) Load check valve
8) Holding O-Ring bushing
9) O-Ring seals 18x2.5
code: 4GUA118025

NOTE - *All articulated parts inside cap, lever box and mechanical joystick are lubricated with synthetic base grease grade NLGI2*

Malfunction	Cause	Remedy
External leakage pivot box lever or control kit side.	Worn spool seal due to mechanical actuation or high back pressure.	Locate the leakage and replace the seal. Check back pressure level.
Excessive internal leakage on A and B ports.	Increase clearance between spools and body due to high wear.	Replace the directional control valve and check the oil contamination level.
Dropping load during transition while raising	High leakage on the load check valve.	Remove the load check valve and clean the seat.
Inability to build pressure on A and B ports.	Low pump pressure and flow.	Check the pump and circuit.
	Valve on L.S. signal is jammed.	Remove and clean the valve; if necessary replace it.

Accessories

Connectors

Type C01 code: 2X1001020

2P+T according to EN175301-803

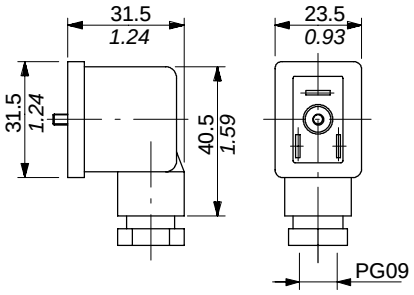

Type C02 code: 2X1001010

2P+T according to ISO4400 / EN175301-803

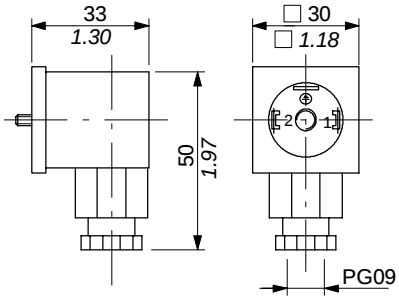

Type C07 code: 5CON001

2P male case with female end type PACKARD "Weather Pack"

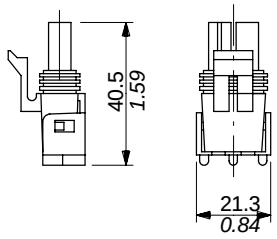

Type C08 code: 5CON003

2P female case with female end type AMP "Junior-Power-Timer"

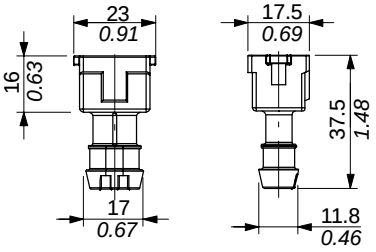

Type C17 code: 5CON005

2P female case with male end type PACKARD "Weather Pack"

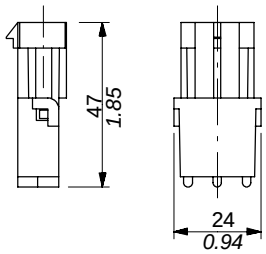

Type C19 code: 5CON007

2P male case with female end type Deutsch DT06-2S

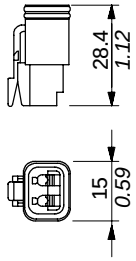

Type C20 code: 5CON017

2P male case with female end type PACKARD "Metri-Pack"

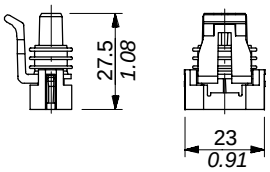

Type C24 code: 5CON0031

2P male case with female end type AMP "Superseal"

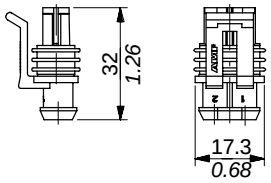

Type	Poles	Nominal voltage	Nominal current	Permitted conductor section range	Permitted cable diameter range	Weather protection
C01	2P + T	250 VAC / 300 VDC	10 A	max.1.5 mm^2 / *max.0.0023 in^2*	6-8 mm / *0.24-0.31 in*	IP65
C02	2P + T	250 VAC / 300 VDC	10 A	max.1.5 mm^2 / *max.0.0023 in^2*	6-8 mm / *0.24-0.31 in*	IP65
C07	2P	/	20 A	1-2 mm^2 / *0.00155-0.0031 in^2*	2.8-3.5 mm / *0.11-0.14 in*	IP67
C08	2P	250 VAC	12 A	0.5-1 mm^2 / *0.00077-0.00155 in^2*	1.4-1.6 mm / *0.055-0.063 in*	IP65
C17	2P	/	20 A	1-2 mm^2 / *0.00155-0.0031 in^2*	1.3-1.7 mm / *0.051-0.067 in*	IP67
C19	2P	/	13 A	1-1.2 mm^2 / *0.00155-0.00186 in^2*	2.2-3.5 mm / *0.088-0.14 in*	IP67
C20	2P	/	14 A	0.8-1 mm^2 / *0.00124-0.00155 in^2*	1.3-1.7 mm / *0.051-0.067 in*	IP65
C24	2P	/	14A	0.3-0.5 mm^2 / *0.00046-0.00077 in^2*	1.4-1.7 mm / *0.055-0.067 in*	IP67

Notes

SDM140 and DLM140 valves can be supplied with one coat of black paint (**CVN** configuration).
Description example: SDM140/2-P(YG3-175)/18L/18L/PSA-**<CVN>** DLM140/2-AP/1N8LF3/1N8LF3/PSA-**<CVN>**
For different colours consult Sales Department.

WALVOIL S.P.A.

42100 REGGIO EMILIA • ITALY • VIA ADIGE, 13/D
TEL. +39.0522.932411 • FAX +39.0522.300984
E-MAIL: INFO@WALVOIL.COM • HTTP: //WWW.WALVOIL.COM

SERVIZIO COMMERCIALE

TEL. +39.0522.932555 • FAX +39.0522.932455

DAU007E